READ AND LANIADO, LLP
ATTORNEYS AT LAW
25 EAGLE STREET
ALBANY, NEW YORK 12207-1901

(518) 465-9313 MAIN
(518) 465-9315 FAX
www.readlaniado.com

KEVIN R. BROCKS
DAVID B. JOHNSON
SAM M. LANIADO

KONSTANTIN PODOLNY
PATRICK A. SILER

RICHARD C. KING
HOWARD J. READ
Of Counsel

Via Electronic Delivery

December 12, 2013

Hon. Kathleen H. Burgess
Secretary
New York State Department of Public Service
Three Empire State Plaza
Albany, NY 12223-1350

Re: CASE 10-T-0350 – Case 10-T-0350 – Laser Northeast Gathering Company, LLC and DMP New York, Inc. – Supplement to Joint Petition for Approval of Amendment to Certificate of Environmental Compatibility and Public Need – Response to Information Request.

Dear Secretary Burgess:

On November 29, 2013, Williams Field Services Company, LLC ("Williams") received an information request (the "Request") from the New York Department of Public Service ("NYDPS") regarding certain information related to the Dunbar Compressor Station (the "Station"). By way of this letter, Williams is responding to the Request.

Please note that Williams' response is organized based upon the NYDPS Request . Documents responsive to a specific NYDPS Request are indicated as numerical attachments to this response.

NYDPS Request

NYDPS Request No. 1: Drawing showing the exact location of the ambient noise survey station, the existing house and distances to the center lines of existing roads in the vicinity. (Paterson Rd, Dunbar Rd and Thompson Rd).

Williams Response No 1: Please see Attachment 1. Drawing C-101, "OVERALL SITE PLAN, AMBIENT NOISE SURVEY STATION LOCATION, DUNBAR NATURAL

GAS COMPRESSOR STATION, BROOME COUNTY, NEW YORK"

NYDPS Request No. 2(a)-(c): Clarification of noise sources causing high Leq noise levels recorded during the night for the following dates:

a) April 11, 2011 up to April 16, 2011.
b) April 21 to April 22, 2011.
c) May 6 up to May 31, 2011.

Williams Response No. 2(a)-(c): Please see Attachment 2. December 5, 2013 Hoover & Keith (H&K) letter report, "SUBJECT: Additional Information Request for Case –10-T-0350 (H&K JN 4517)" NYPSC Question No. 2 and Response.

NYDPS Request No.3: Current and proposed facility plot plan in PDF format. (Such as DBNY-P10-4100).

Williams Response No. 3: Please see Attachment 3.

Current Facility Plot Plan - Drawing DBNY-P10-4000 "DUNBAR – NY COMPRESSOR STATION, FACILITY PLOT PLAN"
Proposed Facility Plot Plan – Drawing DBNY-P10-4100 "DUNBAR NEW YORK, COMPRESSOR STATION, SITE PLAN"

NYDPS Request No.4(a)-(d): Gas Compressors 3606 and 3616.

a) Sound Power Data for existing and proposed gas compressors 3606 and 3616 at the noisiest operating condition.(Mechanical, Exhaust and Air Inlet).
b) DIL values per Octave bands (31.5 to 8K Hz) for existing exhaust silencing systems for units 1 to 4 and for proposed units 5 and 6. (We understand unit 5 will replace unit 2 and be located on PAD-2 and unit 6 will be located on PAD-6). Top of exhaust elevations for current and proposed silencers.
c) Linear (un-weighted) Sound Pressure Levels per Octave bands (dB) and Overall dBA from existing exhaust mufflers and pipes for units 1 to 4 and for proposed units 5 and 6 at 50 ft. (radiated and exhaust end).
d) DIL values per Octave bands (31.5 to 8K Hz) for existing Air intake silencer systems for units 1 to 4, and for proposed units 5 and 6, if applicable.

Williams Response No. 4(a): Please see Attachment 4, Section 6.2 of the June 3, 2010 H&K report, "Laser Midstream Company, LLC Millennium Compressor Station (Broome County, NY); Ambient Sound Survey and Noise Impact Evaluation for NYPSC Section VII Application."

Williams Response No. 4(b): Please see Attachment 5. Station Units 1-3 silencer 22" MCCOS 600 Catalytic Exhaust Silencer with tailpipe modification – total height from building grade is 35 feet. Station Units 4 – 6 32" MCCOS 1200 Catalytic Exhaust

Silencer with dual 23" FPCE-2 Upstream Silencers – total height from building grade 34.5 feet.

Williams Response No. 4(c): Please see Attachment 6. June 4, 2012 H&K letter report, "SUBJECT: Williams Midstream ABA / Laser Northeast Gathering Company Dunbar Compressor station – Noise Mitigation Measures H&K JN 4517." This report provides specification details, as available beyond the design documents provided under Attachment 5, for the silencers and exhaust piping for existing and proposed compressor units.

Williams Response No. 4(d): Air intake silencer information is available in Attachment 4, specifically Section 6.2 of the June 3, 2010 H&K report, "Laser Midstream Company, LLC Millennium Compressor Station (Broome County, NY); Ambient Sound Survey and Noise Impact Evaluation for NYPSC Section VII Application."
However, it should be noted that all current and proposed air intakes are inside of the compressor building. Refer to subsequent Request No.5 (a)-(d) responses regarding the compressor building.

NYDPS Request No.5 (a)-(d): Compressor Building:

a) Exterior metal gage. STC, sound transmission loss and Sound absorption coefficients for metal perforated panels. (from 31.5 to 8K Hertz).
b) Changes in interior Sound Pressure Levels at all bands with the proposed changes.
c) Side inlets and top discharges: Linear Sound Pressure Levels per Octave bands and Overall dBA at 50 ft. estimated under current and proposed interior noise levels conditions.
d) Building Top of roof elevation.

Williams Response No. 5(a): The compressor building exterior metal panel is 18 GA, and the interior perforated metal liner panel is 24 GA. The building is insulated with 6" thick by 8lb density mineral wool. Further performance data is provided under Attachment 4, Section 7.1 of the June 3, 2010 H&K report, "Laser Midstream Company, LLC Millennium Compressor Station (Broome County, NY); Ambient Sound Survey and Noise Impact Evaluation For NYPSC Section VII Application."

Williams Response No. 5(b),(c): The compressor building was designed to accommodate the full complement of air cooling systems and interior noise level conditions as proposed in the expansion project. This performance data is provided unit Attachment 4, Section 7.1 of the June 3, 2010 H&K report, "Laser Midstream Company, LLC Millennium Compressor Station (Broome County, NY); Ambient Sound Survey and Noise Impact Evaluation For NYPSC Section VII Application."

Williams Response No. 5(d): The compressor building roof ridge elevation is 25 feet, 10 inches from top of foundation concrete.

NYDPS Request No.6 (a): Cooling systems: (Compressors and Gas)

a) Coolers Schedule: Linear Sound Pressure Levels per Octave bands (dB) and Overall dBA for existing air cooling systems for units 1 to 4 and for proposed units 5 and 6 at 50 ft. (from 31.5 to 8K Hertz).

Williams Response No. 6(a): Unit 1 has a total of four, Moore Class 10000, MAG Series 36, 11 feet diameter, 5-blade fans installed on its gas coolers, two per gas cooler. Unit 1 has two, Moore Class 10000, MAG Series 24, 9 feet diameter, 4-blade fans installed on its water cooler. The total A-wt. sound level for each cooler was specified so as to not exceed 53 dBA at 50 feet.

Unit 2 has three, Moore Class 10000, MAG Series 48, 12 feet diameter, 3-blade fans installed on its gas cooler. Unit 2 has two, Moore Class 10000, MAG Series 36, 11 feet diameter, 3-blade fans installed on its water cooler. The current Unit 2 coolers will remain paired with the proposed Unit 5. The total A-wt. sound level for each cooler was specified so as to not exceed 55 dBA at 50 feet.

Unit 3 has a total of four, Moore Class 10000, MAG Series 36, 11 feet diameter, 5-blade fans installed on its gas coolers, two per gas cooler. Unit 3 has two, Moore Class 10000, MAG Series 24, 9 feet diameter, 4-blade fans installed on its water cooler. The total A-wt. sound level for each cooler was specified so as to not to exceed 53 dBA at 50 feet.

Unit 4 has three, Moore Class 10000, MAG Series 48, 12 feet diameter, 3-blade fans installed on its gas cooler. Unit 4 has two, Moore Class 10000, MAG Series 36, 11 feet diameter, 4-blade fans installed on its water cooler. The total A-wt. sound level for each cooler was specified so as to not exceed 55 dBA at 50 feet.

Unit 6 will have three, Moore Class 10000, MAG Series 48, 12 feet diameter, 3-blade fans installed on its gas cooler. Unit 6 will have two, Moore Class 10000, MAG Series 36, 11 feet diameter, 3-blade fans installed on its water cooler. The total A-wt. sound level for each cooler was specified so as to not exceed 55 dBA at 50 feet.

Please see Attachment 7 for fan data sheets as available.

NYDPS Request No.7 (a)-(e): Blowdown silencers and Blowdown events:

a) Linear Sound Pressure Levels per Octave bands (dB) and Overall dBA from existing and proposed blowdown silencers at 50 ft.
b) Average duration time of a single event for current and proposed silencing systems.
c) Estimate of number of events per month for the following conditions: existing, construction (New compressors installation) and after construction operation.
d) Current procedure to handle noise complaints.
e) Operational Plan to reduce these events and to reduce the number of complaints from these events such as blowdowns pre-schedule, previous notification to the community, etc.

Williams Response No. 7(a): Please see Attachment 8. The Station's current blow-down silencer: Maxim 36" VT-3 Natural Gas Vent Silencer, and the Station's proposed blow-down silencer: Burgess-Manning Model TH-88

Williams Response No. 7(b): The calculated average duration a full-station blow-down in its current configuration through the existing vent silencer, as necessitated by an Emergency Station Shutdown (ESD) event, is 8 minutes and 40 seconds. The calculated average duration a full-station blow-down in its proposed future configuration through the proposed vent silencer, as necessitated by and ESD event, is 4 minutes and 30 seconds.

Williams Response No. 7(c): As part of Williams' air permit application that was submitted to the New York Department of Environmental Conservation ("NYDEC"), Williams submitted an estimate regarding blow-down events. The number of blow-down events used in the air permit application for maintenance activities are based on the type of blow-down and the historical frequency of events. The number of blow-down events due to an Emergency Shut Down ("ESD") is based on Williams' standard operating procedure to test the ESD system once per year. Since an ESD is an unscheduled event that can occur during abnormal operating conditions, an estimate for the number of ESD events in a given month is impossible to provide. At the Station, there are two different types of maintenance blow-downs: a full blow-down and a partial blow-down. A full compressor blow-down is one in which in the gas pressure inside the compressor and associated piping is currently blown down from 600 psig to atmospheric pressure. A partial compressor blow-down is one in which in the gas pressure inside the compressor and associated piping is currently blown down from 600 psig to 400 psig. The air permit application conservatively represents four full blow-downs for each compressor each month and fifteen partial blow-downs for each compressor each month. This estimate was derived based on historical releases per unit for the first six months of 2013 as well as data available for 2012. Units 1, 2 and 3 (CAT G3606) each averaged 1.4 full blow-downs per month and 8.7 partial blow-downs per month during the first six months of 2013. Unit 4 (CAT G3616) averaged 3.2 full blow-downs per month and 14.7 full blow-downs per month during the first six months of 2013. The historical events per unit for the 2012 calendar year are as follows with no differentiation made between full and partial blow-downs:

Unit 1 56 blow-down events
Unit 2 51 blow-down events
Unit 3 48 blow-down events
Unit 4 72 blow-down events

The above data provides the best estimate of the number of events per month. Estimating for particular conditions is speculative at best. However, the number of blow-downs will be greater during periods of construction. Therefore, as Williams completes the proposed upgrades to the Station, the frequency of blow-downs should decrease. With respect to the construction and installation of the two new compressor units, Williams anticipates

that that majority of the blow-downs related to the installation will be vented through the Station blow-down silencer and, where feasible, during daytime hours.

Williams Response No. 7(d): Williams' current procedure to handle noise complaints is based upon Certificate Condition (J2). Pursuant to Certificate Condition (J2), Williams is required, and does, maintain a log of complaints received relating to noise at the Station. The information contained in the log includes the name and contact information (if provided) of the caller, the date, time, a summary of the complaint, and a follow-up and abatement actions section. Complaint information is transcribed by the North Team-Field Office Administrator who completes the form. The form is reviewed and certified by the North Operations Supervisor. The complaint forms are also reviewed by a Williams' Environmental, Health and Safety Specialist and posted to a summary log on the internal network. All complaints unresolved within 30 days are reported to the New York Public Service Commission.

Additionally, a reminder task is distributed electronically each month to the operations personnel to document noise complaints received (if any). The electronic internal notification is set up in Williams' Environmental Management System ("EMIS"). This compliance process indentifies, interprets, and documents all requirements to ensure timely compliance through a task delivery system. Tasks are closed when completed. If tasks are not completed within the set timeframes, the notification is escalated to internal management to ensure completion. Please see Attachment 9 which is the form that this used when a complaint is received.

Williams Response No. 7(e): Williams has executed several reliability projects in 2013 to reduce the number of blow-downs required as a result of unscheduled maintenance. These projects include, but are not limited to, reducing operating unit vibration, improving unit suction control, and cooler replacement as part of sound mitigation efforts. When maintenance blow-downs do need to occur, the operations staff has been trained to gradually blow-down the units in order to minimize the sound of gas flowing through the vent silencer.

Changes proposed as part of the expansion project will help to further reduce the number, duration, and disturbances caused by blow-down events. The time necessary to blow-down the station during and ESD event with the proposed vent silencer is almost half of the time required by the existing vent silencer. Existing and proposed compressors will be piped so that they can be equalized to the suction header, and then vented to the proposed flare, instead of the vent silencer, during maintenance activities.

In addition, in an effort to further minimize sound events, Williams has installed a device at the Station that measures changes in sound levels. Williams has put an operating plan in place to monitor and respond to changes in sound levels recorded by the device. In the event that an unusual sound level change is detected, alarms are triggered at Williams' gas control group and personnel are immediately dispatched to investigate the cause of the event to make sure that all of the equipment is operating properly.

NYDPS Request No.8: Forecasted noise levels: Future noise levels at all positions (NSA#'s and property lines receptors) after proposed work is completed with and without adding ambient noise levels. Specify ambient noise levels assumption. Include elevations for all evaluated receptors.

Williams Response No. 8: Please see Attachment 2. December 5, 2013 Hoover & Keith (H&K) letter report, "SUBJECT: Additional Information Request for Case 10-T-0350 (H&K JN 4517)" NYPSC Question No. 2 and Response.

Respectfully submitted,

READ AND LANIADO, LLP
Attorneys for Williams Field
Services Company, LLC and DMP
New York, Inc.

/s/
By: Sam M. Laniado

Attachments
cc: Service List

ATTACHMENT 1

REVISIONS		
NO	DATE	DESCRIPTION

SCALE	AS NOTED	
DRAWN	SAB	DATE 12/05/13
CHK'D	GAS	DATE 12/05/13
APPROVED		DATE
JOB NO.		
AFE/P.O.NO.		
CLIENT FILE NO.		
JHA FILE NO.		

Williams

JHA Companies — SURVEYORS ENGINEERS ENVIRONMENTAL GIS MAPPING — www.jhacompanies.com

TITLE

OVERALL SITE PLAN
AMBIENT NOISE SURVEY STATION LOCATION
DUNBAR NATURAL GAS COMPRESSOR STATION
BROOME COUNTY, NEW YORK

NO. C-101 REV.

ATTACHMENT 2

HOOVER & KEITH INC.

ACOUSTICS & NOISE CONTROL ENGINEERING

11391 MEADOWGLEN, SUITE D
HOUSTON, TEXAS 77082
(281)496-9876 FAX: (281)496-0016

37685 BAYWOOD
FARMINGTON HILLS, MICHIGAN 48335
(248)473-8722 FAX: (248)473-8785

h&k

DATE: December 5, 2013

TO: Neal Thatcher
Senior Attorney
Williams Midstream
1212 South Abington Road
Clarks Summit, PA 18411

FROM: Brian Hellebuyck, PE
Senior Consultant
Hoover and Keith, Inc.
37685 Baywood
Farmington Hills, MI 48335

SUBJECT: Additional Information Request for Case 10-T-350 (H&K JN 4517)

Per your request, Hoover and Keith, Inc. (H&K) submits additional acoustical information for the following items:

- December 5, 2011 Sound Level Report (NYPSC Question Number 2)
- Sound Level Data for Existing and Proposed Equipment (NYPSC Question Numbers 4-6 & 7a are provided in a separate Appendix)
- Projected Station Sound Level Contributions at the NSAs (NYPSC Question Number 8)
- Projected Station Sound Level Contributions at the Station Property Line (NYPSC Question Number 8)

NYPSC Question No. 2

2) Clarification of noise sources causing high Leq noise levels recorded during the night for the following dates:

a) April 11, 2011 up to April 16, 2011
b) April 21 to 22, 2011.
c) May 6 up to May 31, 2011.

Response:

December 5, 2011 Sound Level Report

Figure 1 (p. 6) depicts the location of the sound level monitoring equipment on a scaled drawing. The figure is from the Ambient Sound Level Report [1]. **Figures 2-5** (p. 7) are photographs of the

[1] Millennium Compressor Station – Sound Level Monitor Results. December 5, 2011. Hoover and Keith Inc.

sound monitor installation. The 2010 report included the following explanation of the sound level monitoring equipment and basis for the selected measurement position:

The sound level monitor system was located on the south side of an uninhabited residence located at 106 Patterson Road as shown on Figure 1. The intent was to select a location that was representative of the general area long-term acoustical environment, including the proposed 40 acre compressor station property. At the time of the sound level monitor installation the residence at this location was not occupied and the closest road is Patterson Road which did not appear to be heavily traveled, especially at night. The monitor consists of a data logging sound level meter (model SP-DL-1-1/3, by Quest Technologies) which was installed within a small storage building. The microphone was located approximately 13-feet to the south of the building and approximately 9-feet above the ground level. The microphone was a model BK49361 as manufactured by Bruel & Kjaer and is attached to the sound level meter via a microphone preamp and microphone extension cable. The microphone was fitted with an outdoor windscreen equipped with bird spikes. Prior to starting the monitor the complete system is calibrated with a handheld microphone calibrator. This measurement system would comply with the Type 1 accuracy tolerances as defined by the ANSI standard S1.4.

In regard to the NYDPS requested clarification of noise sources "causing high L_{eq} noise levels on specific dates", the unattended sound level monitor measured the Equivalent Sound Level (L_{eq}) in one minute increments. As the monitor output data is the measured sound level, it is not possible to provide any further clarification on the measured sound levels. Our review of the data suggests that the sound level monitor was functioning properly during the dates in question.

NYPSC Question No. 8

8) Forecasted Noise Levels: Future noise levels at all positions (NSA#'s and property lines receptors) after proposed work is completed with and without adding ambient noise levels. Specify ambient noise levels assumption. Include elevations for all evaluated receptors.

Response:

Projected Station Sound Level Contributions at the NSAs

H&K's measurements, observations and analysis indicate that Station operation with existing Units 1-4 is in compliance with the NYPSC 40 dBA criteria at all residences (i.e., NSAs). The measured sound levels on June 17, 2013 with Units 1-4 in operation ranged from 32 to 36 dBA.

Because the expanded Station includes additional units of the same design, it is possible to estimate the potential increase in Station noise factoring in the increase in Station HP. In this

instance, the additional increase in sound levels is based upon the Future HP and Existing HP per the following formula:

$$\text{Increase in Station Sound Level} = 10 * \log\left[\frac{\text{Future Total HP}}{\text{Existing Total HP}}\right] = 10 * \log\left[\frac{17{,}755\ \text{HP}}{10{,}060\ \text{HP}}\right] = 2.5\ \text{dB}$$

The following table depicts the potential increase in Station noise at the NSAs after the estimated increase in Station sound level is added to the existing measured sound levels during operation of Units 1-4:

Position	**Residences (i.e. NSAs)**	**Distance to Comp. Bldg.**	**Units 1-4** (06/17/13) **(dBA)**	**Sound Level Increase (dB)**	**Units 1-5** (future) **(dBA)**	**Meets 40 dBA NYPSC Criteria**
Pos. 1A	NSA #1A	1,175 ft. SW	**36.1**	**2.5**	**38.6**	**Yes**
Pos. 1B	NSA #1B	1,425 ft. W-NW	**32.3**	**2.5**	**34.8**	**Yes**
Pos. 2	NSA #2	1,900 ft. N	**35.5**	**2.5**	**38.0**	**Yes**
Pos. 3	NSA #3	1,800 ft. W	**31.9**	**2.5**	**34.4**	**Yes**
Pos. 4	NSA #4	2,100 ft. S	**32.4**	**2.5**	**34.9**	**Yes**
	Observations during the (06/17/13) Sound Level Survey					
Pos. 1A	Audible sounds included sound of Peepers, sound of birds and Station was faintly detectable.					
Pos. 1B	Audible sounds included distant traffic, nearby small pool filter and intermittent sound of birds. The Station was not audible.					
Pos. 2	Audible sounds included intermittent sound of distant birds and sound of Station. It was necessary to pause for louder bird noise.					
Pos. 3	Audible sounds included sound of insects, sound of distant traffic and the Station was detectable.					
Pos. 4	Audible sounds included a nearby air conditioner unit, distant aircraft noise and distant traffic. The Station may have been faintly detectable.					

Calculation Demonstrating that the Modified Station would Comply with the 40 dBA NYPSC Criteria

As depicted in the above table, the modified Station would comply with the 40 dBA NYPSC criteria. It should be noted that because the measured sound levels included the contribution, or significant contribution, of normal environmental noise (i.e., sound of Peepers, birds, distant traffic, insects, etc.), it can be concluded that the actual sound level of the existing and future Station will be less than the measured / reported values.

Projected Station Sound Level Contributions at the Station Property Lines

H&K's measurements, observations and analysis indicate that Station operation with existing Units 1-4 is in compliance with the Town of Windsor Noise Ordinance at all Station property lines. The following table depicts the potential increase in Station noise at the NSAs after the estimated increase in Station sound level is added to the existing measured sound levels during operation of Units 1-4:

Position	Property Line	Distance to Comp. Bldg.	Units 1-4 [1] (05/23/13 or 06/17/13) (dBA)	Sound Level Increase (dB)	Units 1-5 (future) (dBA)	Meets 43.2 dBA Windsor N-Time Criteria
Pos. 2	Northwest	1,900 ft. N-NW	**35.5**	**2.5**	**38.0**	**Yes**
Pos. 5	Northeast	1,900 ft. NE	**38.6**	**2.5**	**41.1**	**Yes**
Pos. 6	East	900 ft. N-NE	**40.4**	**2.5**	**42.9**	**Yes**
Pos. 7	East	850 ft. NE	**38.1**	**2.5**	**40.6**	**Yes**
Pos. 8	East	550 ft. E	**40.6**	**2.5**	**43.1**	**Yes**
Pos. 9	Southeast	800 ft. SE	**35.8**	**2.5**	**38.3**	**Yes**
Pos. 10	South	650 ft. S	**38.7**	**2.5**	**41.2**	**Yes**
Pos. 11	Southwest	900 ft. SW	**35.3**	**2.5**	**37.8**	**Yes**
Pos. 12	West	650 ft. W	**42.1**	**2.5**	**44.6**	**Yes [2]**
Pos. 13	West	950 ft. NW	**38.8**	**2.5**	**41.3**	**Yes**

[1] Lowest final measured / reported sound level - May 23, 2013 or June 17, 2013 sound surveys.

[2] As noted in previous reports, the Station Dehy System is the most significant contributor at Pos. 12. It is anticipated that the additional compressor units would not increase the sound level at Pos. 12 above 43.2 dBA.

Calculation Demonstrating that the Modified Station would Comply with the 43.2 dBA Town of Windsor Nighttime Criteria

It should be noted that because the majority of the property boundary is within a heavily wooded area of mature trees and because a significant portion of the property boundary is along an elevated ridge, the normal environmental sound level (i.e., sound of wind aloft along with the natural sound of birds, insects, etc.) will often exceed the Town of Windsor nighttime criteria. Because of this fact, a measured sound level slightly greater than the Town of Windsor nighttime criteria does not necessarily indicate non-compliance, as the ambient sound level conditions during the measurement can falsely indicate non-compliance.

In conclusion, as depicted in the above table, the modified Station would comply with the 43.2 dBA Town of Windsor nighttime criteria, based upon the long term measured L_n of 40.2 dBA.

Final Comments regarding NYPSC Question No. 8

The initial 2010 Noise Impact Report and subsequent reports submitted to the NYPSC, throughout this project contain significant sound level data for the existing and proposed equipment. The Report Appendix attempts to organize the sound level data for the NYPSC technical review (Questions 4-6 and 7a).

H&K's initial work for the Dunbar Compressor Station consisted of the June 2010 Ambient Sound Survey and Noise Impact Evaluation for the NYPSC Article VII Application, which was performed for Laser Midstream. H&K's next work phase began in January 2012 for Laser Midstream as the Dunbar Compressor Station was becoming operational and during the transition to the new owner, Williams Midstream. H&K's detailed noise mitigation studies have been since performed for Williams Midstream.

With respect to forecasted noise levels at the NSAs and Station Property Lines, this report presents a straightforward calculation methodology to demonstrate compliance with the proposed Station modifications, in response to the NYPSC technical question. It should be noted that the straightforward calculation methodology to demonstrate compliance with the proposed Station modifications is made with the benefit and knowledge gained from our detailed Station field studies performed at the Dunbar Compressor Station to date.

H&K has utilized similar calculation methodology for FERC regulated compressor stations where identical compressor units are to be added to an existing compressor station. The resulting FERC certificate then stipulates that the compressor station owner must perform a post-construction sound level survey, at full load operation, and submit a written report to document compliance with the applicable FERC certificate requirements.

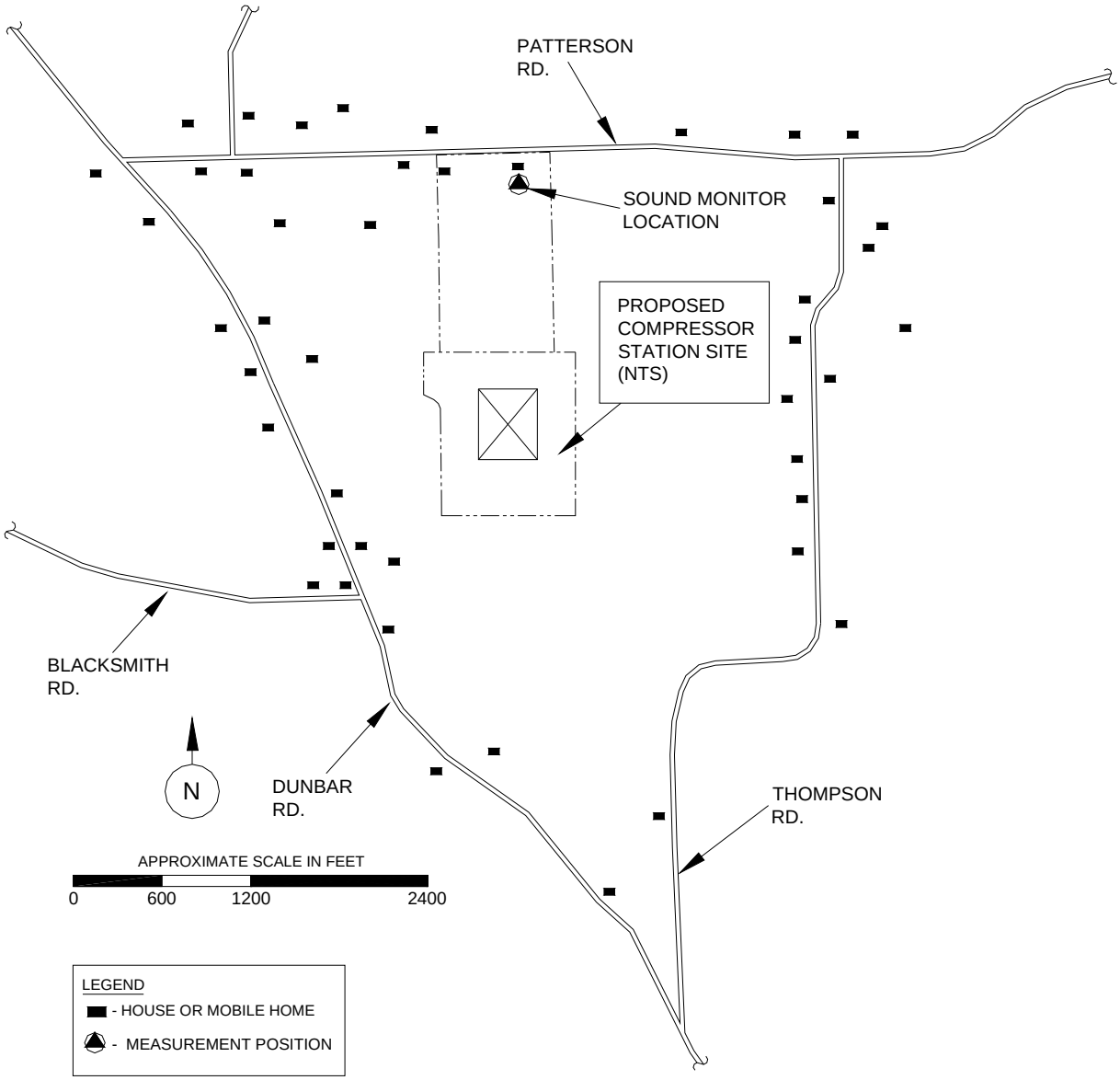

Figure 1: Sound Level Monitor Location

Figure 2: Sound Monitor Installation

Figure 3: Sound Monitor Installation

Figure 4: Sound Monitor Installation

Figure 5: Sound Monitor Installation

ATTACHMENT 3

CURRRENT FACILITY PLOT PLAN

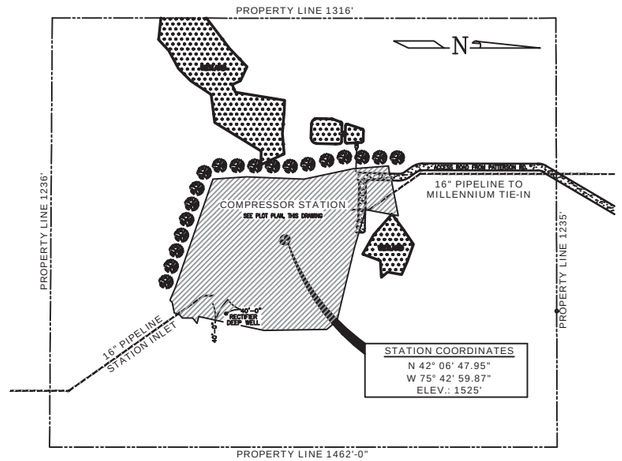

STATION LOCATION PLAN

SCALE: 1"=200'

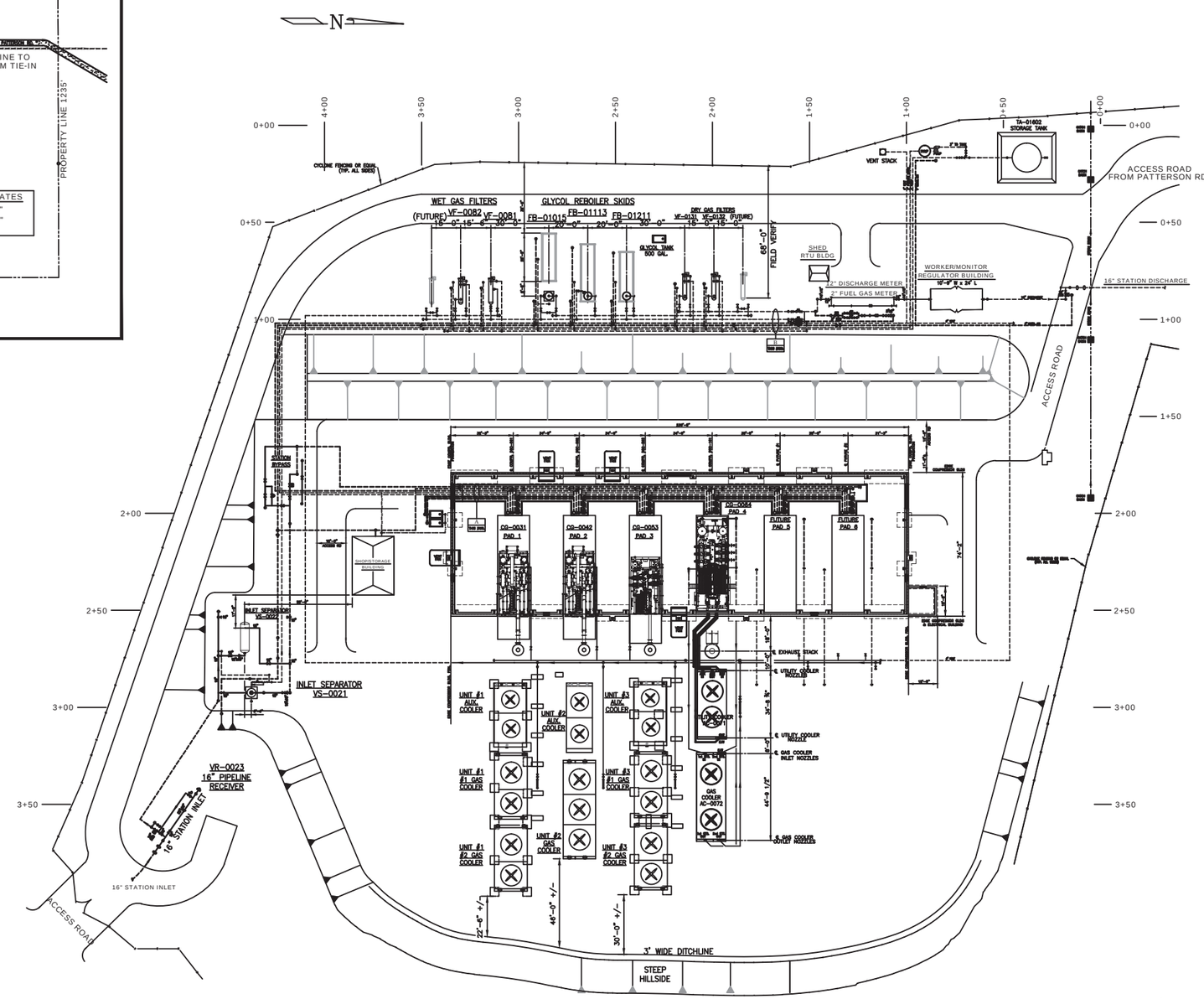

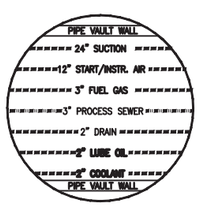

DETAIL A

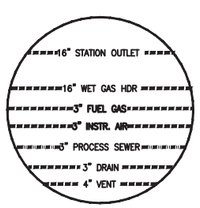

DETAIL B

NOTE:
FIELD VERIFY DIMENSIONS PRIOR TO FABRICATION AND CONSTRUCTION.

LEGEND

SUCTION	PROCESS DRAIN
DISCHARGE	GLYCOL (TEG)
FUEL GAS / START / INSTR. AIR	LUBE OIL / COOLANT / WATER
VENT / BLOWDOWN	ESD SUPPLY / REMOTE
DUMP	STORM DRAIN

REFERENCE DRAWINGS

DWG. NO.	DESCRIPTION
.	.

REV	DRAWN BY	DATE REVISED	CHECKED BY	PROJECT ENG.	APPROVED BY
6	KES	3/4/13			
5	AS-BUILT PER SELECT ENGINEERING WALKDOWN				
	MDT	4/9/12	CWR		
4	ADDED STANDARD WILLIAMS TITLEBLOCK AND NUMBERING SYSTEM				
	CHEWY	3/16/12	W. GATLIN		
3	REVISED DEHY PIPING				
	PRO-PLUS	7/27/11			

WILLIAMS FIELD SERVICES COMPANY, LLC
APPALACHIAN BASIN AREA

DUNBAR - NY COMPRESSOR STATION
FACILITY PLOT PLAN

BROOME COUNTY — NEW YORK

DRAWN BY	TWR	SCALE: 1"=30'	A.F.E.: 0950
CHECKED BY		DRAWING NO.	
PROJECT ENG.		DBNY-P10-4100	
APPROVED BY			
DATE ISSUED	11/05/09		6

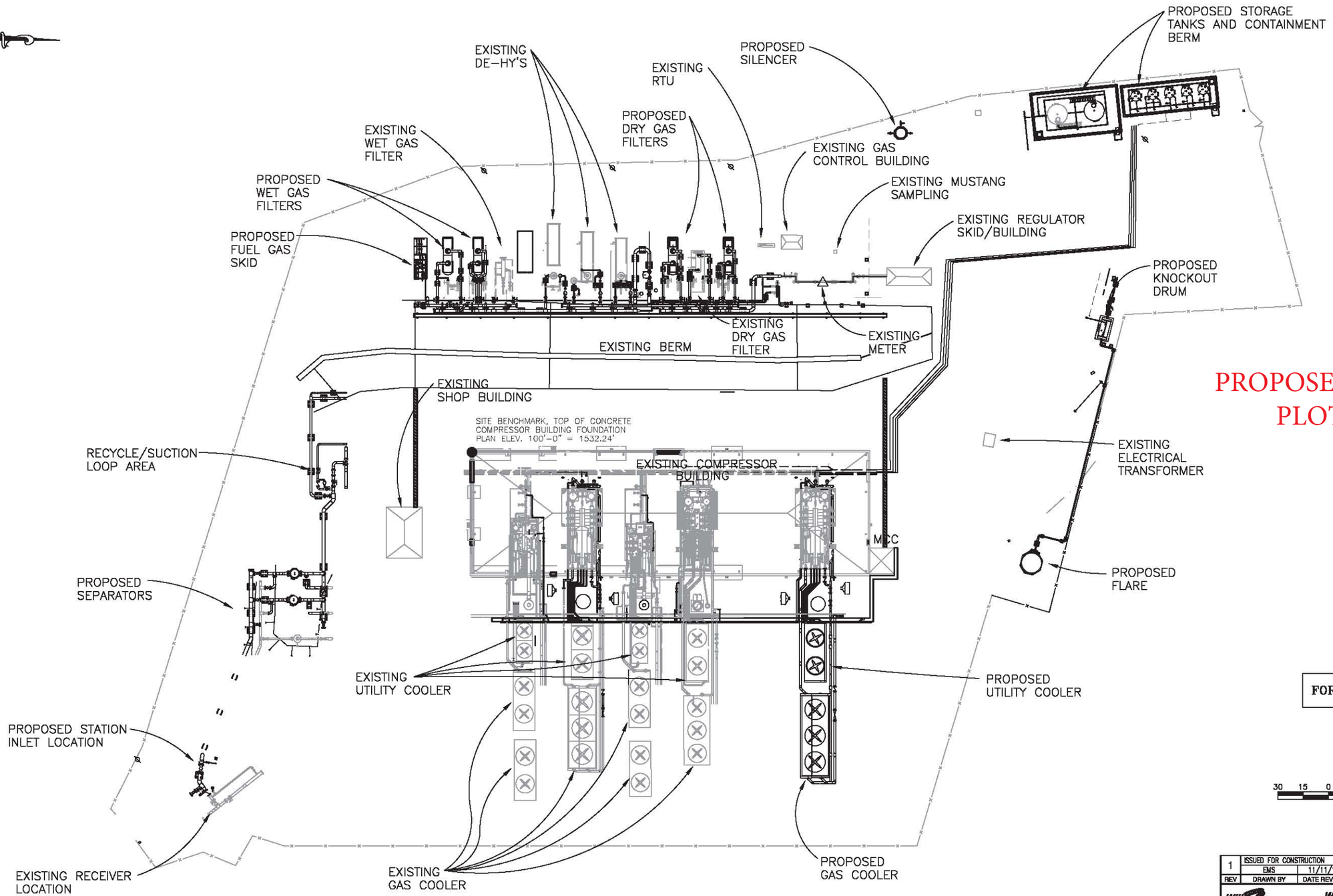

PROPOSED FACILITY PLOT PLAN

FOR INFORMATION ONLY

NOTE:
THIS DRAWING WAS CREATED USING INFORMATION TAKEN FROM SNC-LAVALIN DRAWINGS, EMS AS-BUILT DRAWINGS, WILLIAMS DRAWINGS, SURVEY DATA AND VENDOR DRAWINGS.

REV	DRAWN BY	DATE REVISED	CHECKED BY	PROJECT ENG.	APPROVED BY
1	ISSUED FOR CONSTRUCTION				
	EMS	11/11/13	GW	MAF	

Williams Field Services Company, LLC.

D SQUARED ENGINEERING, PLLC. — ENERGY MANAGEMENT & SERVICES CO.

CORPORATE OFFICE:
108 FIELDVIEW DRIVE
P.O. BOX 1007
VERSAILLES, KY 40383
TEL:(859) 873-0075 • FAX:(859) 873-5872

BRANCH OFFICES:
HOUSTON, TX • DETROIT, MI
CHARLESTON, WV • PITTSBURGH, PA
www.emseng.com

DUNBAR NEW YORK
COMPRESSOR STATION
SITE PLAN

BROOME COUNTY — NEW YORK

DRAWN BY	EMS	SCALE: 1"=30'	A.F.E.:
CHECKED BY	GW	DRAWING NO.	
PROJECT ENG.	MAF	DBNY-P10-4000	
APPROVED BY			
DATE ISSUED	11/11/13		1

ATTACHMENT 4

LASER MIDSTREAM COMPANY, LLC
MILLENNIUM COMPRESSOR STATION
(Broome County, NY)

AMBIENT SOUND SURVEY AND NOISE IMPACT EVALUATION
For NYPSC Section VII Application

H&K Report No. 2472

H&K Job No. 4248

Date of Report: June 3, 2010

Prepared for: **Laser Midstream Company, LLC**
333 Clay Street, Suite 4500
Houston, TX 77002

Submitted by: Brian R. Hellebuyck, P.E.
Hoover & Keith Inc.
11391 Meadowglen, Suite D
Houston, TX 77082

REPORT SUMMARY

In this report, we present the results of a March 26, 2010 ambient sound survey and subsequent noise impact analysis associated with the proposed **Millennium Compressor Station**, a new compressor station to be owned and operated by **Laser Midstream Company, LLC** (Laser). The purpose of the ambient sound survey and acoustical analysis is to:

- Document the existing acoustic environment around the site and locate the nearby residences (i.e., noise-sensitive areas (NSAs)) surrounding the proposed station.
- Project the sound level contribution that would result for the following station compressor unit configurations:

Condition	Case	Cat 3606	Cat 3616	Total
Base	Case 1	3 Units	1 Unit	4 Units
Alternate	Case 2	3 Units	3 Units	6 Units

- Recommend noise control measures and noise specifications for the station equipment.

The following table summarizes the estimated sound level contributions, at the nearby NSAs, for the potential station compressor unit configurations:

NSA	Distance & Direction to Comp. Bldg.	Case 1 (dBA)	Case 2 (dBA)
NSA #1 (Houses)	1,100 ft. SW to NW	**35.5**	**37.4**
NSA #2 (Houses)	1,900 ft. N	**30.1**	**32.0**
NSA #3 (Houses)	1,800 ft. E	**30.7**	**32.5**
NSA #4 (Houses)	2,000 ft. S	**29.6**	**31.5**

Est'd Sound Level Contribution of Base Case 1 and Alternate Case 2 Station Configurations

<u>The results of our analysis indicate that the estimated sound level contribution at the nearby NSAs should be less than the 40 dBA sound criteria if required by the NYPSC</u>.

The following table summarizes the Noise Impact Assessment for the estimated compressor station contributions, at the nearby NSAs, to the March 26, 2010 measured ambient sound levels and it includes the following information for NSA #1 thru NSA #4:

- Measured ambient L_d sound levels.
- Estimated contribution of Base Case 1 station compressor units.
- Measured ambient L_d sound level <u>plus</u> Estimated contribution of Base Case 1 station compressor units (i.e., total sound level).

- Noise increase above Measured ambient L_d sound level for Base Case 1 station compressor units.

- Estimated contribution of Alternate Case 2 station compressor units.
- Measured ambient L_d sound level plus Estimated contribution of Alternate Case 2 station compressor units (i.e., total sound level).
- Noise increase above Measured ambient L_d sound level for Alternate Case 2 station compressor units.

NSAs	Distance and Direction Comp. Bldg.	Meas'd Ambient L_d (dBA)	Est'd Station Sound Level for Case 1 (dBA)	Meas'd Ambient Sound Level + Est. Station Sound Level for Case 1 (dBA)	Noise Increase above Meas'd Ambient Sound Level (dB)	Est'd Station Sound Level for Case 2 (dBA)	Meas'd Ambient Sound Level + Est. Station Sound Level for Case 2 (dBA)	Noise Increase above Meas'd Ambient Sound Level (dB)
NSA #1 (Houses)	1,100 ft. SW to NW	47.7	**35.5**	48.0	0.3	**37.4**	48.1	0.4
NSA #2 (Houses)	1,900 ft. N	36.5	**30.1**	37.4	0.9	**32.0**	37.8	1.3
NSA #3 (Houses)	1,800 ft. E	41.9	**30.7**	42.2	0.3	**32.5**	42.4	0.5
NSA #4 (Houses)	2,000 ft. S	42.0	**29.6**	42.2	0.2	**31.5**	42.4	0.4

Station Noise Impact Assessment for Base Case 1 and Alternate Case 2 Station Configurations

Our observations from the March 26, 2010 ambient sound survey was that the area surrounding the proposed station is generally a quiet area that would be controlled by normal environmental sounds (i.e., birds, insects, wind noise, distant traffic during a southerly wind, etc.). It is expected that the ambient sound levels would be less than the March 26, 2010 measured levels during very quiet periods (i.e., no wind, no nighttime insect noise, no bird noise, no distant traffic noise, etc.). The ambient sound survey was limited to daytime sound level measurements because rainfall during the early evening of March 25, 2010 prevented early evening ambient sound level measurements. However, for the meteorological conditions that occurred during the sound survey, the ambient sound levels during the nighttime would be expected to be similar to the measured daytime sound levels.

In conclusion, the 40 dBA sound criteria assumed to be stipulated by the NYPSC is a stringent criteria that should reduce the noise impacts of the proposed station at the existing NSAs (i.e., residences).

TABLE OF CONTENTS

Page

1.0 INTRODUCTION 1
2.0 SOUND CRITERIA 1
3.0 DESCRIPTION OF SITE AND PROPOSED COMPRESSOR STATION 1
3.1 Description of the Site 1
3.2 Description of the Station Equipment 2
4.0 MEASUREMENT METHODOLOGY 2
4.1 Sound Measurement Locations 2
4.2 Data Acquisition and Sound Measurement Equipment 2
5.0 MEASUREMENT RESULTS 3
5.1 Measured Sound Level Data 3
5.2 Observations during the Site Sound Tests 3
6.0 NOISE IMPACT EVALUATION 3
6.1 Significant Sound Sources and Calculation Methodology 3
6.2 Estimated Sound Levels for Base Case 1 & Alternate Case 2. 4
7.0 NOISE CONTROL REQUIREMENTS 5
7.1 Compressor Building. 5
7.2 Auxiliary Building (Mechanical Equipment and Workshop Areas). 7
7.3 Engine Exhaust Systems. 8
7.4 Engine Air Intake Systems. 10
7.5 Engine Driven JW/AW/Gas Aftercoolers. 10
7.6 Electric Motor Driven JW/AW Coolers & Electric Motor Driven Gas Coolers. 11
7.7 Aboveground Gas Piping. 11
7.8 Unit and Station Control Valves. 12
7.9 Absorptive Barrier. 12
7.10 Miscellaneous Equipment. 12
8.0 FINAL COMMENT 13

Figure 1: Millennium Compressor Station and Surrounding Area. A-1
Figure 2: Millennium Compressor Station Plot Plan. A-2

Table A: Measured and Averaged Daytime and Nighttime L_{eq} and Calculated L_{dn}. B-1
Table B: Meteorological Conditions during the Daytime Sound Testing B-1
Table C: Measured and Averaged Octave-Band SPLs during Sound Testing B-2

Tables D1-D3: Estimated Sound Contribution of Station at NSA #1. ..... C-2 to C-4
Table E: Est'd Sound Contribution of Station at NSA #2, NSA #3 and NSA #4. ..... C-5

Figure 3: Noise Control Detail for 3616 Exhaust and Intake Systems. D-1

APPENDIX E: Summary of Typical Metrics for Regulating Environmental Noise & Acoustical Terminology Discussed in This Report. E-1

1.0 INTRODUCTION

In this report, we present the results of a March 26, 2010 ambient sound survey and subsequent noise impact analysis associated with the proposed **Millennium Compressor Station**, a new compressor station to be owned and operated by **Laser Midstream Company, LLC** (Laser). The purpose of the ambient sound survey and acoustical analysis is to:

- Document the existing acoustic environment around the site and locate the nearby residences (i.e., noise-sensitive areas (NSAs)) surrounding the proposed station.
- Project the sound level contribution that would result for the following station compressor unit configurations:

Condition	Case	Cat 3606	Cat 3616	Total
Base	Case 1	3 Units	1 Unit	4 Units
Alternate	Case 2	3 Units	3 Units	6 Units

- Recommend noise control measures and noise specifications for station equipment.

2.0 SOUND CRITERIA

It is our understanding that recent State of New York Article VII filings and projects contained the requirement that sound contribution of a facility not exceed 40 dBA at any existing residences. H&K contacted Ms. Jenny Royer of Broome County to investigate any applicable Broome County noise ordinance or requirements. Ms. Royer indicated that Broome County does not regulate zoning, including noise.

For reference, a summary of acoustical terminology and typical metrics used to measure and regulate environmental noise is provided at the end of this report in **Appendix E**.

3.0 DESCRIPTION OF SITE AND PROPOSED COMPRESSOR STATION

3.1 Description of the Site

Figure 1 (p. A-1) depicts the proposed Millennium Compressor Station (Station) and surrounding area. The Station is located in Windsor Township, Broome County, New York approximately 8 miles W of Binghamton, NY. The surrounding area mainly consists of heavily forested areas with some agricultural land upon hilly terrain. The closest NSA are rural residences approximately 1,100 ft. SW to NW of the compressor building.

3.2 Description of the Station Equipment

The initial Station (i.e., Base Case 1) will consist of (3) Cat 3606 / Aerial Units, (1) Cat 3616 / Aerial Unit and necessary ancillary equipment. Alternate Case 2 could consist of (3) Cat 3606 / Aerial Units, (3) Cat 3616 / Aerial Units and necessary ancillary equipment. **Figure 2** (p. A-2) depicts the proposed Station plot plan.

4.0 MEASUREMENT METHODOLOGY

4.1 Sound Measurement Locations

Four (4) locations were chosen to measure the sound levels near the closest NSAs located around the proposed Station and the measurement locations are depicted on **Figure 1** (p. A-1). The following is a description of the NSAs and the selected sound measurement positions:

Pos. 1: Adjacent to NSA #1: Houses along Dunbar Road approximately 1,100 ft. SW to NW of the center of the compressor building.
Pos. 2: Adjacent to NSA #2: Houses located along Patterson Road approximately 1,900 ft. N of the center of the compressor building.
Pos. 3: Adjacent to NSA #3: Houses located on Thompson approximately 1,800 ft. W of the center of the compressor building.
Pos. 4: Adjacent to NSA #4: Houses on Dunbar Road approximately 2,000 ft. S of the center of the compressor building.

4.2 Data Acquisition and Sound Measurement Equipment

Ambient sound measurements for the proposed Station were performed by Larry Lengyel of H&K in the afternoon of March 26, 2010. At the reported sound measurement locations, the A-wt. equivalent sound levels (L_{eq}) and unweighted octave-band sound pressure levels (SPLs) were performed at approximately 5 ft. above ground. The sound measurements at the nearby NSAs attempted to exclude "extraneous sound" such as a car passing immediately by the measurement position and the sound measurements were typically performed during periods of minimum audible traffic noise. The acoustical measurement system consisted of a Rion Model NA-27 Sound Level Meter (a Type 1 SLM per ANSI S1.4 & S1.11) equipped with a 1/2-inch microphone with a windscreen, and the SLM was calibrated within 1 year of the sound test date.

5.0 MEASUREMENT RESULTS

5.1 Measured Sound Level Data

Table A (p. B-1) shows the measured daytime L_{eq} (i.e., L_d) at the NSA measurement locations and the average of the measured data since multiple samples of the noise level were typically performed at each location. **Table A** also includes the calculated L_{dn} at each NSA measurement position, noting that the L_d was used to calculate a representative L_{dn} since it was deemed that the L_d was representative of nighttime levels. Meteorological conditions during the tests are summarized in **Table B** (p. B-1). The measured unweighted octave-band SPLs at the reported sound measurement positions and the average of the octave-band SPLs are provided in **Table C** (p. B-1). The following **Table 1** summarizes the measured ambient L_d at the NSAs:

Position	NSA	Distance & Direction to Comp. Bldg.	L_d (dBA)
Pos. 1	NSA #1 (Houses)	1,100 ft. SW to NW	47.7
Pos. 2	NSA #2 (Houses)	1,900 ft. N	36.5
Pos. 3	NSA #3 (Houses)	1,800 ft. E	41.9
Pos. 4	NSA #4 (Houses)	2,000 ft. S	42.0

Table 1: Measured Ambient Sound Levels at the Closest NSAs

It is our opinion that the measured sound level data adequately quantifies the existing ambient sound levels around the site for the meteorological conditions that occurred during the sound survey, and the ambient sound levels during the nighttime would be expected to be similar to the measured daytime sound levels. Rainfall during the early evening of March 25, 2010 prevented H&K from obtaining early evening ambient data.

5.2 Observations during the Site Sound Tests

The area surrounding the proposed Station is generally a quiet area that would be controlled by normal environmental sounds (i.e., birds, insects, wind noise, distant traffic during a southerly wind, etc.).

6.0 NOISE IMPACT EVALUATION

6.1 Significant Sound Sources and Calculation Methodology

The noise impact evaluation considers the noise produced by all significant sound sources associated with the proposed compressor units that could impact the sound contribution at the nearby NSAs. The following sound sources are considered significant:

- Engine – Compressor casing noise that penetrates the compressor building
- Engine exhaust noise
- Engine exhaust duct and muffler shell noise
- Engine air inlet noise
- Vertical engine driven JW/AW/Gas cooler noise
- Horizontal electric motor driven JW/AW noise
- Horizontal electric motor driven gas cooler noise
- Aboveground piping noise

Tables D-1 to D-3 (pp. C-2 to C-4) show the calculation (i.e., spreadsheet analysis) of the estimated octave-band SPLs and the A-wt. sound level, at the closest existing residence (i.e., NSA #1) contributed by the significant noise sources for standard day propagating conditions (i.e., no wind, 60 deg. F., 70% R.H.). These spreadsheet analyses also include the potential noise reduction due to the anticipated and/or recommended noise control measures for Station compressor unit configurations.

6.2 Estimated Sound Levels for Base Case 1: (3) 3606 Units + (1) 3616 Unit
Estimated Sound Levels for Alternate Case 2: (3) 3606 Units + (3) 3616 Units

Tables 2 & 3 depict the Case 1 & 2 estimated octave-band and A-Wt. sound levels at NSA #1, respectively, and each table contains the following:

- Sound source contributions for Cat 3606 Unit(s)
- Overall sound contribution for Cat 3606 Unit(s)
- Sound source contributions for Cat 3616 Unit(s)
- Overall sound contribution for Cat 3616 Unit(s)
- Total sound contribution of Cat 3606 Unit(s) Cat 3616 Unit(s)

CASE 1 (BASE)	TOTAL SOUND SOURCE CONTRIBUTIONS AT NSA #1	SPL in dB Per Octave-Band Center Frequency (Hz)									A-Wt. Level
		31	63	125	250	500	1000	2000	4000	8000	
(3) 3606 Units - Engine/Comp. Casing Noise		51	46	39	32	23	16	13	6	0	28
(3) 3606 Units - Engine Exhaust Outlet		47	41	39	27	18	20	18	10	0	27
(3) 3606 Units - Exh. Duct / Muffler Body Noise		35	33	28	23	14	11	10	1	0	19
(3) 3606 Units - Engine Intake Noise		31	25	19	13	5	5	5	9	0	14
(3) 3606 Units - Vertical JW/AW/Gas Cooler Noise		48	43	40	32	26	23	16	5	0	30
(3) 3606 Units - Aboveground Piping Noise		35	31	27	23	21	18	14	4	0	23
Total Contribution for (3) 3606 Units		54	49	44	36	29	27	22	14	8	33.8
(1) 3616 Unit - Engine/Comp. Casing Noise		49	44	37	30	22	15	11	4	0	27
(1) 3616 Unit - Engine Exhaust Outlet		45	41	35	25	17	18	16	6	0	25
(1) 3616 Unit - Exh. Duct / Muffler Body Noise		35	33	28	23	15	12	10	1	0	20
(1) 3616 Unit - Engine Intake Noise		27	19	11	3	0	0	0	0	0	8
(1) 3616 Unit - JW/AW Cooler Noise		35	31	28	23	18	15	8	0	0	21
(1) 3616 Unit - Gas Cooler Noise		34	30	27	21	16	13	6	0	0	19
(1) 3616 Unit - Aboveground Piping Noise		30	26	22	17	16	13	8	0	0	18
Total Contribution for (1) 3616 Unit		51	47	40	33	26	22	19	11	8	30.5
Total for Contribution (3) 3606 & (1) 3616 Units		56	51	46	37	31	28	24	16	11	35.5

Table 2: Base Case 1: (3) 3606 Units + (1) 3616 Unit

CASE 2 (ALTERNATE)	TOTAL SOUND SOURCE CONTRIBUTIONS AT NSA #1	SPL in dB Per Octave-Band Center Frequency (Hz)									A-Wt. Level
		31	63	125	250	500	1000	2000	4000	8000	
(3) 3606 Units - Engine/Comp. Casing Noise		51	46	39	32	23	16	13	6	0	28
(3) 3606 Units - Engine Exhaust Outlet		47	41	39	27	18	20	18	10	0	27
(3) 3606 Units - Exh. Duct / Muffler Body Noise		35	33	28	23	14	11	10	1	0	19
(3) 3606 Units - Engine Intake Noise		31	25	19	13	5	5	5	9	0	14
(3) 3606 Units - Vertical JW/AW/Gas Cooler Noise		48	43	40	32	26	23	16	5	0	30
(3) 3606 Units - Aboveground Piping Noise		35	31	27	23	21	18	14	4	0	23
Total Contribution for (3) 3606 Units		54	49	44	36	29	27	22	14	8	33.8
(3) 3616 Unit - Engine/Comp. Casing Noise		54	49	42	35	26	19	16	9	0	31
(3) 3616 Unit - Engine Exhaust Outlet		50	46	40	30	21	22	21	11	0	29
(3) 3616 Unit - Exh. Duct / Muffler Body Noise		40	38	33	28	19	16	15	6	0	24
(3) 3616 Unit - Engine Intake Noise		32	24	16	8	0	0	0	4	0	10
(3) 3616 Unit - JW/AW Cooler Noise		40	36	33	28	22	19	13	1	0	25
(3) 3616 Unit - Gas Cooler Noise		39	35	32	26	20	17	11	0	0	23
(3) 3616 Unit - Aboveground Piping Noise		30	26	22	17	16	13	8	0	0	18
Total Contribution for (3) 3616 Units		56	51	45	37	30	27	23	14	8	34.8
Total for Contribution (3) 3606 & (3) 3616 Units		58	53	47	40	33	30	26	17	11	37.4

Table 3: Alternate Case 2: (3) 3606 Units + (3) 3616 Units

7.0 NOISE CONTROL REQUIREMENTS

The following section provides recommended noise control measures and equipment noise specifications along with other assumptions that may affect the noise generated by the facility.

7.1 Compressor Building

Building Structure

- As a minimum, walls/roof should be constructed with exterior steel of 18 gauge and interior layer of 6-inch thick unfaced mineral wool (e.g., 8.0 pcf uniform density) covered with a 24 gauge perforated liner. Thermal insulation, such as "R-19", should not be used as a substitute for the 8.0 pcf material.

- Personnel entry doors should have a minimum STC-38 sound rating and could include door glazing if a 2' x 2' maximum view port is employed (e.g., 1/2 inch thick laminated glazing or double pane safety glass). Doors should seal well with the doorframe and be self-closing.

- No windows, skylights or "open" louvers should be installed. All voids and openings in the building walls resulting from penetrations should be patched and well sealed.

- The compressor building west wall has (3) equipment access doors (i.e., roll-up doors). Each equipment access opening should have a double roll-up door system (i.e., 2 doors in series). Each overhead roll-up door, as a minimum, should be a 20 guage insulated type design (e.g., 20 guage exterior with a 22 gauge backskin with insulation core) and should be completely weather-stripped.

Building Ventilation

- The building ventilation system should be designed to properly ventilate (and cool) the building and equipment during maximum outside ambient temperatures with all personnel and equipment doors closed. Personnel and/or equipment doors should only be opened during maintenance activities.

- The A-wt. sound level for each ventilation inlet should not exceed **40 dBA** at **50 feet** from the building penetration (i.e., inlet louver, acoustic inlet hood, etc.). The A-wt. sound level for each ventilation exhaust outlet should not exceed **40 dBA** at **50 feet** from the building penetration (i.e., exhaust louver, exhaust hood, etc.). A ridge vent shall not be utilized. Each ventilation inlet and exhaust outlet shall assume that the following sound pressure levels exist inside the compressor building at and adjacent to the ventilation equipment:

SPLs per Octave-Band Center Freq. & A-Wt. Level

31.5	63	125	250	500	1000	2000	4000	8000	dBA
85	90	90	95	95	95	95	95	90	**101**

- It is our experience that building ventilation can be accomplished via building air supply fans, building exhaust fans, or with both building supply and exhaust fans. It is our recommendation that building wall panel supply fans are utilized to the extent possible to help keep ventilation system noise sources lower to the ground and not at the building peak.

- As a minimum, air-supply fans used for ventilation should include a metal boot enclosing the fan; a minimum 36-inch length exterior silencer and a 90° weather hood lined with acoustical insulation. Assuming separate roof exhaust vents will be utilized, each roof exhaust vent, as a minimum, should include a 36-inch length silencer (i.e., baffle-type design) mounted between the building surface and vent / hood (i.e., in the ventilator throat).

7.2 Auxiliary Building

Building Structure (for Mechanical Equipment and Workshop Areas)

- As a minimum, walls/roof should be constructed with exterior steel of 24 gauge and interior layer of 4-inch thick unfaced mineral wool (e.g., 8.0 pcf uniform density) covered with a 24 gauge perforated liner. Thermal insulation, such as "R-19", should not be used as a substitute for the 8.0 pcf material.

- Personnel entry doors should have a minimum STC-38 sound rating and could include door glazing if a 2' x 2' maximum view port is employed (e.g., 1/2 inch thick laminated glazing or double pane safety glass). Doors should seal well with the doorframe and be self-closing.

- No windows or "open" louvers should be installed. All voids and openings in the building walls resulting from penetrations should be patched and well sealed. A ridge vent shall not be utilized

- Overhead roll-up doors, as a minimum, should be a 22 gauge insulated type design (e.g., 20 gauge exterior with a 24 gauge backskin with insulation core) and should be completely weather stripped.

Building Ventilation (for Mechanical Equipment and Workshop Areas)

- The building ventilation system should be designed to properly ventilate (and cool) the building and equipment during maximum outside ambient temperatures with all personnel and equipment doors closed. Personnel and/or equipment doors should only be opened during maintenance activities.

- The A-wt. sound level for each ventilation inlet should not exceed **40 dBA** at **50 feet** from the building penetration (i.e., inlet louver, acoustic inlet hood, etc.). The A-wt. sound level for each ventilation exhaust outlet should not exceed **40 dBA** at **50 feet** from the building penetration (i.e., exhaust louver, exhaust hood, etc.). Each ventilation inlet and exhaust outlet shall assume that the following sound pressure levels exist inside the compressor building at and adjacent to the ventilation equipment:

SPLs per Octave-Band Center Freq. & A-Wt. Level

31.5	63	125	250	500	1000	2000	4000	8000	dBA
85	85	85	85	90	90	90	85	75	**95**

- As a minimum, air-supply fans used for ventilation should include a metal boot enclosing the fan; a minimum 36-inch length exterior silencer and a weather hood lined with acoustical insulation. Assuming separate roof exhaust vents will be utilized, each roof exhaust vent, as a minimum, should include a 36-inch length silencer (i.e., baffle-type design) mounted between the building surface and vent/hood (i.e., in the ventilator throat).

7.3 Engine Exhaust Systems

Cat 3606 Unit

The exhaust system for the proposed compressor engine should include a muffler system that provides the following dynamic insertion loss (DIL) values at the rated operating conditions (i.e., DIL values if a single muffler system is employed):

DIL Values in dB per Octave-Band C.F. for Exh. Muffler System

31.5	63	125	250	500	1000	2000	4000	8000
20	27	52	50	47	49	51	51	50

- In addition, the combination catalyst silencer should be a minimum 3-chamber reactive silencer.

The following are other items associated with the exhaust system that should be addressed:

- Exhaust piping located between the building and outdoor muffler should be completely covered with an acoustical lagging consisting of a heavy-gauge steel jacketing (min. 18 gauge) along with a 3-inch thick inner layer of insulation.

- The exhaust pipe expansion joint/flanges (if located outside the building) should be covered with a removable/reusable acoustical blanket material. The blanket material typically consists of a core of 2-inch thick needled fiber mat (6.0-8.0 pcf density) and a liner material of mass-loaded vinyl (1.0-1.25 psf surface weight) that is covered with a coated fiberglass cloth. The inner layer of insulation should be covered with a stainless steel mesh instead of coated fiberglass cloth.

- Because the combination catalyst silencer will be supported by and located on top of the vertical engine driven cooler, the exhaust silencer shell radiated noise is an elevated source. Accordingly, the envelope around the silencer should provide sufficient space to acoustically lag the entire silencer shell after initial

start-up. If necessary, the exhaust silencer could be acoustically lagged with removable blankets and/or 3" of mineral wool covered by metal jacketing.

Cat 3616 Unit

The exhaust system for the proposed compressor engine should include a muffler system that provides the following dynamic insertion loss (DIL) values at the rated operating conditions (i.e., DIL values if a single muffler system is employed):

DIL Values in dB per Octave-Band C.F. for Exh. Muffler System

31.5	63	125	250	500	1000	2000	4000	8000
22	34	44	48	52	52	52	45	40

- In addition, the combination catalyst silencer should be a minimum 3-chamber reactive silencer.

- If necessary, approximately ¾ of the combination catalyst silencer may be acoustically lagged, in the future, with 3" of mineral wool covered by metal jacketing. See **Figure 3** (p. D-1) for additional details. It is suggested that the exhaust silencer manufacturer review and comment on the potential retrofit. In addition, the exhaust silencer manufacturer could supply stand off rings which would greatly facility a retrofit acoustical lagging.

The following are other items associated with the exhaust system that should be addressed:

- Exhaust piping located between the building and outdoor muffler should be completely covered with an acoustical lagging consisting of a heavy-gauge steel jacketing (min. 18 gauge) along with a 3-inch thick inner layer of insulation.

- The exhaust pipe expansion joint/flanges (if located outside the building) should be covered with a removable/reusable acoustical blanket material. The blanket material typically consists of a core of 2-inch thick needled fiber mat (8.0 pcf density) and a liner material of mass-loaded vinyl (1.0-1.25 psf surface weight) that is covered with a coated fiberglass cloth. The inner layer of insulation should be covered with a stainless steel mesh instead of coated fiberglass cloth.

7.4 Engine Air Intake Systems

Cat 3606 Unit and Cat 3616 Unit

The most effective and recommended method to silence the engine air intake system is to employ an absorptive-type silencer in-line with the air intake piping (i.e., inside the building) with the air intake filter located outside of the building. The following are the recommended DIL values for the "in-line" air intake silencer:

DIL Values in dB per Octave-Band Center Freq. (in Hz) for In-Line Silencer

31.5	63	125	250	500	1000	2000	4000	8000
3	8	14	24	33	33	33	33	23

An example of an "in-line" silencer that could be employed is a Universal Model SU5 Absorptive Silencer.

The air intake filter should be capable of meeting the following DIL values:

DIL Values in dB per Octave-Band Center Freq. (in Hz) for Air Intake Filter

31.5	63	125	250	500	1000	2000	4000	8000
2	4	8	12	15	20	20	20	15

Note: These DIL values are assumed to be typical for an air intake filter.

Alternatively, the optional Cat heavy-duty air cleaner with precleaners may be utilized in lieu of an in-line absorptive silencer which is located inside the building. If the Cat heavy-duty system is utilized, it will be necessary to acoustically lag the outdoor portion of the air intake piping with a layer of minimum 3" thick fiberglass or mineral wool (e.g., 8.0 pcf uniform density) that is covered with a mass-filled vinyl jacket (e.g., composite of 1.0 psf mass-filled vinyl laminated to 0.020" thick aluminum), as illustrated in **Figure 3** (p. D-1).

7.5 Engine Driven Vertical JW/AW/Gas Aftercoolers

Laser indicates that each 3606 package is equipped with an Air-X-Changer Model 156EH vertical engine driven JW/AW/Gas Cooler, noting that these coolers will be orientated to the east and away from the closest NSAs. It is required that the coolers are supplied with Moore Class 10,000 EC (extended chord) fans with a maximum **Fan PWL** of **96 dBA**, for a single fan cooler.

7.6 Electric Motor Driven JW/AW and Gas Coolers

The A-wt. sound level of each Cat 3616 JW/AW cooler should not exceed **55 dBA** at a distance of **50 feet** from the unit perimeter at the rated operating conditions (i.e., all fans and motors in operation), which is equivalent to a total sound power level (PWL) of approximately **87-88 dBA** (i.e., **84-85 dBA PWL** per fan). Nonetheless, each JW/AW cooler shall have 2 Howden ELFA low noise composite fans with V-Belt Drive. The cooler supplier should provide calculations depicting the A-wt. sound level and the unweighted octave-band SPLs at **50 feet** from the cooler with all fans/motors operating.

The A-wt. sound level of each Cat 3616 unitized gas cooler should not exceed **55 dBA** at a distance of **50 feet** from the unit perimeter at the rated operating conditions (i.e., all fans and motors in operation), which is equivalent to a total sound power level (PWL) of approximately **87-88 dBA** (i.e., **84-85 dBA PWL** per fan). Nonetheless, each unitized gas cooler shall have 2 Howden ELFA low noise composite fans with V-Belt Drive. The cooler supplier should provide calculations depicting the A-wt. sound level and the unweighted octave-band SPLs at **50 feet** from the cooler with all fans/motors operating.

A concrete surface beneath the JW/AW and Gas Coolers is not permitted. A crushed stone surface is acceptable.

7.7 Aboveground Gas Piping

It is recommended that the majority of the Station suction and gas discharge headers are buried to the greatest extent feasible. If the aboveground piping can be minimized to suction and discharge lead lines, the aboveground gas piping may not need to be acoustically lagged. In the event this source becomes problematic, outdoor aboveground gas piping could be covered (i.e., lagged) with a minimum 3" thick fiberglass or mineral wool (e.g., 8.0 pcf uniform density) that is covered with a mass-filled vinyl jacket (e.g., composite of 1.0 psf mass-filled vinyl laminated to 0.020" thick aluminum).

Aboveground valves can be covered with removable and/or reusable acoustic material and/or blankets. The blanket material typically consists of a core of 2-inch thick needled fiber mat (6.0-8.0 pcf density) and a liner material of mass-loaded vinyl (1.0-1.25 psf surface weight) that is covered with a coated fiberglass cloth. The inner layer of insulation should be covered with a stainless steel mesh instead of coated fiberglass cloth.

Please note that thermal insulation (i.e., calcium silicate and banded metal jacketing) is not usually suitable for attenuating piping noise. If thermal insulation for any piping systems is required for personnel protection, etc, then consideration to utilize the

acoustical system described above should be given. It is also recommended that during the design phase the aboveground gas piping should be separated from other metal structures such as metal gratings, walkways and stairs around the piping, to the greatest extent possible in the event acoustical treatment is subsequently required.

7.8 Unit and Station Control Valves

It is recommended that Unit and/or Station recycle / suction pressure control valves are globe style with noise attenuating trim (i.e., Whisper III or Whisper Flo).

7.9 Potential Acoustic Barrier

A 20 ft. high absorptive barrier at the south end of the compressor building may be necessary to shield JW/AW cooler noise for the southwest direction. It is recommended that provision for this barrier is incorporated into the Station design to facilitate a future retrofit addition, if required. There are several types of barrier materials that could be employed, and the Type LSE Noise Barrier Wall System, as fabricated/supplied by Sound Fighter Systems is one example barrier system. To control reflected noise from the Inlet Separator equipment and piping, the surface of each side of the barrier must be absorptive. The Sound Fighter barrier system also includes options for single and double personnel doors that can be incorporated into the barrier layout as desired. Individual sections of the Sound Fighter barrier system can be removed to facilitate major maintenance if necessary. As an alternative, the barrier system could be constructed with a metal panel system designed with a sound-absorptive surface on each side of the barrier.

7.10 Miscellaneous Equipment

Gas Blowdown Silencer (i.e., unit piping purge/unit blowdown): It is recommended that this sound source is silenced to **60 dBA** at **300 ft**. (as measured 5 ft. above the ground). The following silencers would be suitable:

- Universal Model (Acousti-Tube Style)
- Maxim Model VT-1

Starting Air / Starting Gas Vent Silencer: It is recommended that each starting vent is silenced to **60 dBA** at **300 ft**. (as measured 5 ft. above the ground). The following silencers would be suitable:

- Universal Model SU5
- Burgess Manning Model ACA
- Maxim Model FPS-FPSE

These are standard in-line center body absorptive silencers, they do not restrict flow; however they are not pressure rated unless stipulated.

Dehy Skid and Reboiler: It is recommended that any reboiler meets an A-Wt. sound level of **50 dBA** at **50 feet** from the heater perimeter at the rated maximum operating conditions (includes any noise radiated from the heater stack opening). A "low noise" box-type burner assembly shall be utilized. It is recommended that the manufacturer provide supporting calculations for the proposed equipment.

Fuel Gas Skids: It is recommended that any fuel gas skids be designed with regulators that can achieve **85 dBA** at **3 ft**. for the worst case design conditions (i.e., anticipated maximum pressure drop and flow across the regulator valve).

Station Standby Generator: It is recommended that any standby generator should not exceed **60 dBA** at **100 ft**. from the auxiliary building or generator enclosure at rated operating conditions. This sound specification includes, but is not limited to, the following noise sources associated with the generator: (1) noise of the engine-generator that penetrates the auxiliary building, (2) noise of the exterior jacket/auxiliary water cooler, (3) noise of the engine exhaust (hospital/critical grade muffler should be employed), and (4) noise of the air intake system.

8.0 FINAL COMMENT

Table 4 summarizes the estimated sound levels for the Base Case 1 and Alternate Case 2 Station compressor unit configurations:

NSA	Distance & Direction to Comp. Bldg.	Case 1 (dBA)	Case 2 (dBA)
NSA #1 (Houses)	1,100 ft. SW to NW	**35.5**	**37.4**
NSA #2 (Houses)	1,900 ft. N	**30.1**	**32.0**
NSA #3 (Houses)	1,800 ft. E	**30.7**	**32.5**
NSA #4 (Houses)	2,000 ft. S	**29.6**	**31.5**

Table 4: Est'd Sound Level Contributions of Case 1 and Case 2 Comp. Unit Configurations

The results of our analysis indicate that the estimated sound level contribution at the nearby NSAs should be less than a 40 dBA sound criteria if stipulated by the NYPSC.

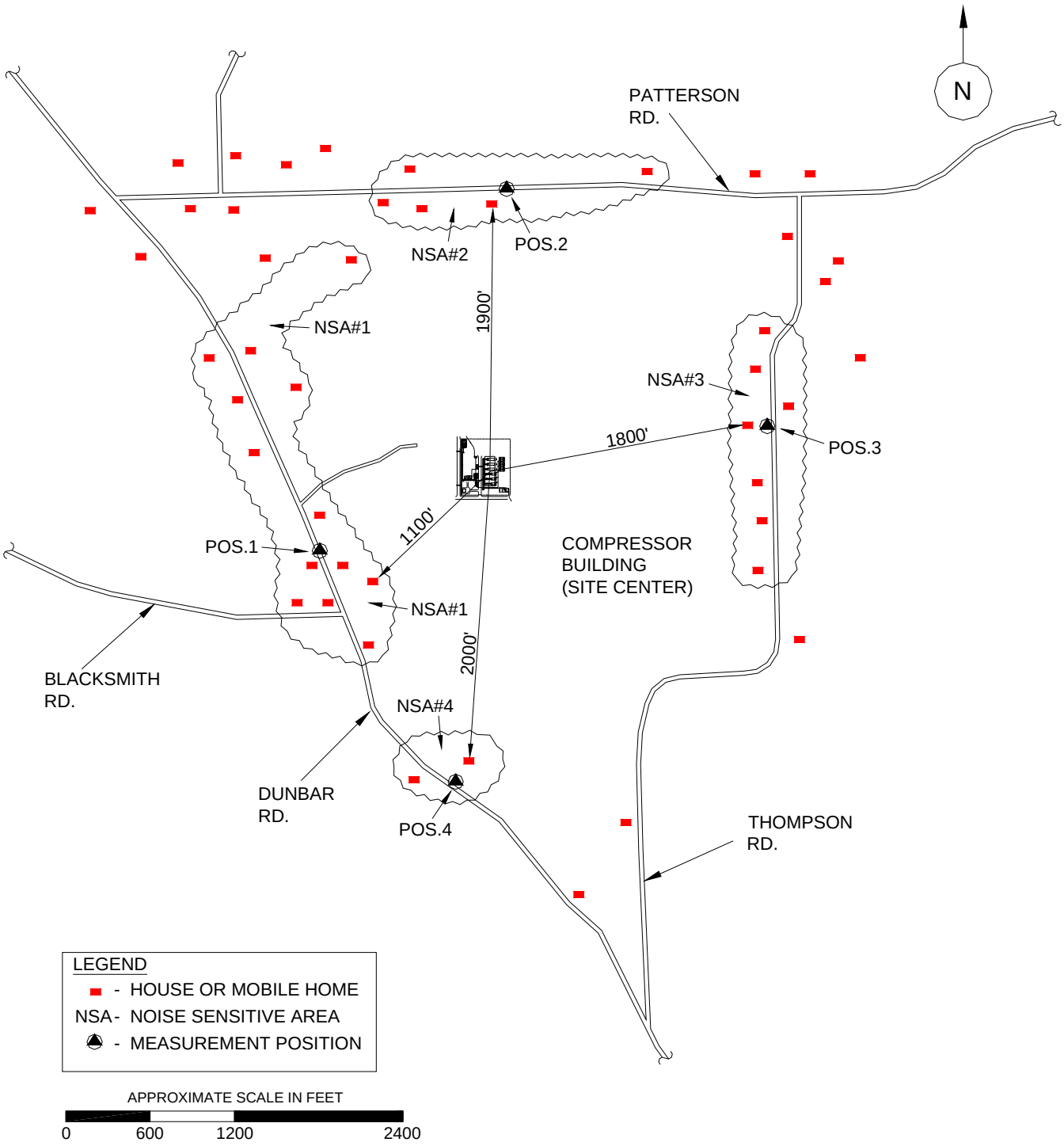

Figure 1: **Proposed Millennium Compressor Station and Surrounding Area**

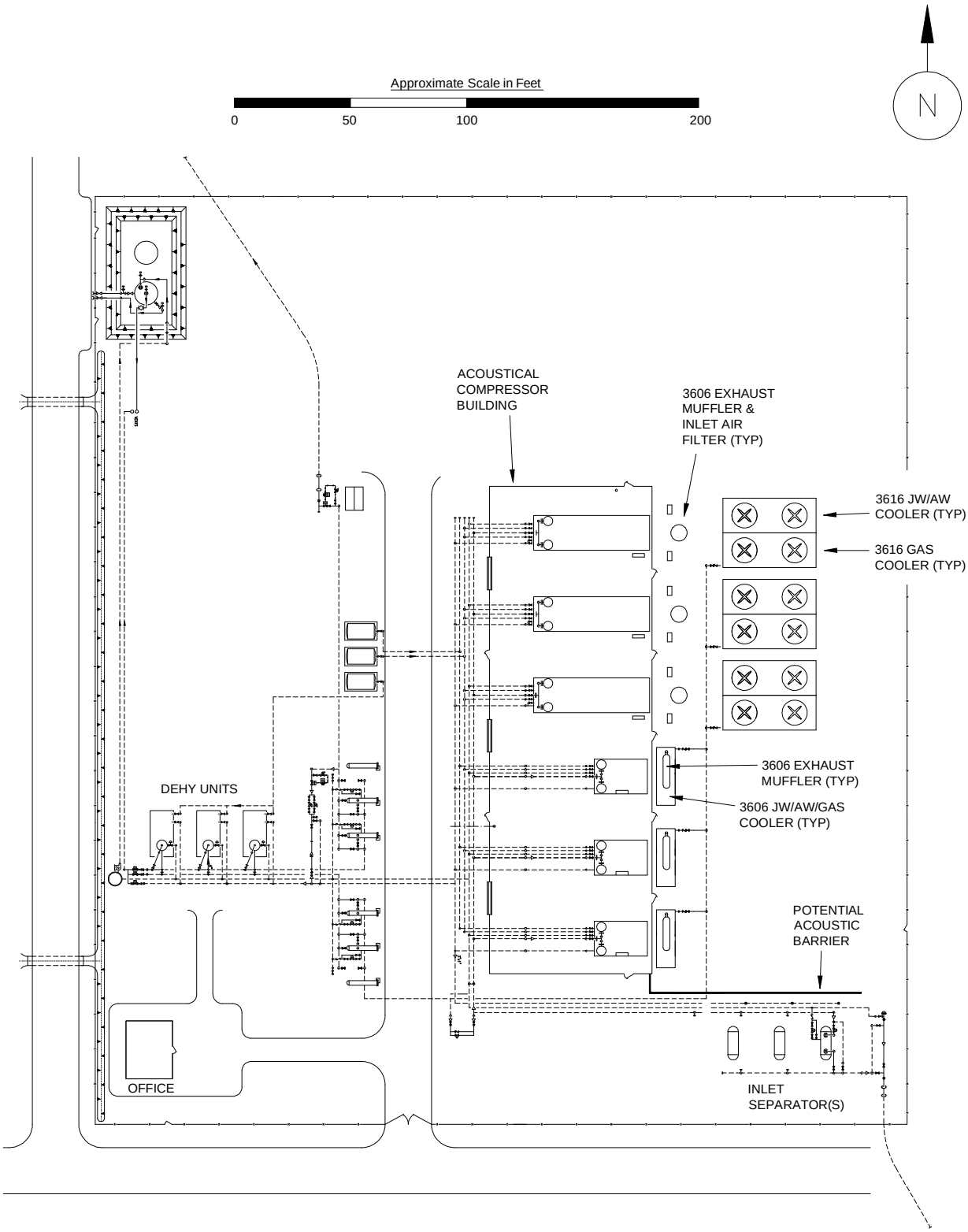

Figure 2: **Proposed Millennium Compressor Station Plot Plan**

Measurement Set		Measured A-Wt. Sound Levels (dBA)					
Meas. Pos. & NSA	Time/Date of Test	Day-time Leq(Ld)	Avg'd of Ld	Night-time Leq(Ln)	Avg'd of Ln	Calc'd Ldn	Notes/Observations
Pos. 1 (NSA #1)	9:15 AM (3/26/10)	44.5					Noise sources that contributed to A-wt. levels
Residences approx.	9:16 AM (3/26/10)	50.4	**47.7**	47.7	**47.7**	**54.1**	included birds, distant dogs, distant traffic,
1,100 ft. SW to NW	9:17 AM (3/26/10)	48.6		Note (1)		Note (1)	wind blowing in brush/trees.
of Comp. Bldg.							
Pos. 2 (NSA #2)	8:51 AM (3/26/10)	35.1					Noise sources that contributed to A-wt. levels
Residences approx.	8:52 AM (3/26/10)	37.9	**36.5**	36.5	**36.5**	**42.9**	included wind blowing in brush/trees, and
1,900 ft. N	8:53 AM (3/26/10)	36.5		Note (1)		Note (1)	small stream/drainage ditch.
of Comp. Bldg.							
Pos. 3 (NSA #3)	9:01 AM (3/26/10)	45.9					Noise sources that contributed to A-wt. levels
Residences approx.	9:02 AM (3/26/10)	41.0	**41.9**	41.9	**41.9**	**48.3**	included birds, distant dogs, and wind.
1,800 ft. E	9:03 AM (3/26/10)	39.4		Note (1)		Note (1)	
of Comp. Bldg.							
Pos. 4 (NSA #4)	9:05AM (3/26/10)	38.4					Noise sources that contributed to A-wt. levels
Residences approx.	9:08 AM (3/26/10)	44.0	**42.0**	42.0	**42.0**	**48.4**	included distant traffic, distant aircraft, wind,
2,000 ft. S	9:09 AM (3/26/10)	43.9		Note (1)		Note (1)	and sound of birds.
of Comp. Bldg.							

Table A: **Laser Midstream Company LLC - Millennium CS: Summary of Measured Daytime L_{eq} (i.e., L_d) and Calculated L_{dn} at the Closest NSAs around the Site on March 26, 2010**

Note (1): Although nighttime levels (L_n) were not measured, ambient nighttime A-wt. sound levels should be similar to or equal to the measured daytime sound levels.

Measurement Set		Temp.	R.H.	Wind	Wind	Peak	
Meas. Pos.	Time Frame of Tests	(°F)	(%)	Direction	Speed	Wind	Sky Conditions
Pos. 1, 2, 3 & 4	8:45 AM to 9:20 AM	23-28	55	Wind primarily from the NW	2-4 mph	4-7 mph	Mostly clear sky

Table B: **Laser Midstream Company LLC - Millennium CS: Summary of the Meteorological Conditions during the March 26,2010 Ambient Sound Survey**

Measurement Set		Sound Pressure Level (SPL) in dB per Octave-Band Frequency (in Hz)									A-Wt.
Meas. Pos. & NSA	Time/Date of Test	31.5	63	125	250	500	1000	2000	4000	8000	Level
Pos. 1 (NSA #1)	9:15 AM (3/26/10)	55.8	56.8	42.8	37.4	40.2	42.0	33.8	30.9	26.5	44.5
Residences approx.	9:16 AM (3/26/10)	55.9	49.8	48.7	46.1	45.0	46.6	43.8	39.2	31.8	50.4
1,100 ft. SW to NW	9:17 AM (3/26/10)	69.9	54.9	48.6	44.7	44.0	44.8	41.0	36.0	31.6	48.6
of Comp. Bldg.	**Average SPL**	**60.5**	**53.8**	**46.7**	**42.7**	**43.1**	**44.5**	**39.5**	**35.4**	**30.0**	**47.7**
Pos. 2 (NSA #2)	8:51 AM (3/26/10)	47.6	45.8	37.0	32.6	33.8	29.5	25.4	22.3	18.3	35.1
Residences approx.	8:52 AM (3/26/10)	49.1	46.4	40.0	34.3	35.2	32.8	30.2	26.3	20.8	37.9
1,900 ft. N	8:53 AM (3/26/10)	49.2	47.3	42.1	34.9	33.9	31.5	27.3	22.0	18.6	36.5
of Comp. Bldg.	**Average SPL**	**48.6**	**46.5**	**39.7**	**33.9**	**34.3**	**31.3**	**27.6**	**23.5**	**19.2**	**36.5**
Pos. 3 (NSA #3)	9:01 AM (3/26/10)	58.6	54.0	50.8	45.0	41.7	38.9	40.9	26.3	18.0	45.9
Residences approx.	9:02 AM (3/26/10)	53.0	49.6	46.4	40.1	35.9	37.1	32.8	24.1	17.0	41.0
1,800 ft. E	9:03 AM (3/26/10)	49.6	47.6	45.7	37.6	34.5	35.4	31.6	20.5	15.2	39.4
of Comp. Bldg.	**Average SPL**	**53.7**	**50.4**	**47.6**	**40.9**	**37.4**	**37.1**	**35.1**	**23.6**	**16.7**	**41.9**
Pos. 4 (NSA #4)	9:05AM (3/26/10)	48.4	46.3	44.2	35.5	33.8	35.0	29.9	20.3	16.1	38.4
Residences approx.	9:08 AM (3/26/10)	69.0	58.9	49.8	42.4	39.9	38.8	35.4	27.9	21.7	44.0
2,000 ft. S	9:09 AM (3/26/10)	67.4	57.4	49.6	42.7	40.0	38.6	35.4	28.8	22.9	43.9
of Comp. Bldg.	**Average SPL**	**61.6**	**54.2**	**47.9**	**40.2**	**37.9**	**37.5**	**33.6**	**25.7**	**20.2**	**42.0**

Table C: **Laser Midstream Company LLC - Millennium CS: Meas'd Ambient A-Wt. Sound Levels (L_d) and Unweighted Octave-Band (O.B.) SPLs at the Closest NSAs on March 26, 2010**

Analysis Methodology

The noise impact evaluation considers the noise produced by all significant sound sources associated with the initial and future compressor units that could impact the sound contribution at the nearby NSAs. The following sound sources are considered significant:

- Engine-compressor casing noise that penetrates the compressor bldgs.
- Noise of the engine exhaust(s)
- Noise generated by the engine air intake system(s)
- Noise of the vertical engine driven JW/AW/Gas Aftercoolers for the Cat 3606 units
- Noise of the electric motor driven JW/AW horizontal coolers for the Cat 3616 units
- Noise of the electric motor driven Gas Aftercoolers for the Cat 3616 units
- Noise radiated by above ground compressor station piping

Tables D-1 to D-3 (pp. C-2 to C-4) show the calculation (i.e., spreadsheet analysis) of the estimated octave-band SPLs and the A-wt. sound level, at the closest existing residence (i.e., NSA #1) contributed by the significant noise sources for standard day propagating conditions (i.e., no wind, 60 deg. F., 70% R.H.). These spreadsheet analyses also include the potential noise reduction due to the anticipated and/or recommended noise control measures for potential compressor unit configurations. The following summarizes the analysis procedure:

- Initially, unweighted octave-band PWLs for each noise source (without noise control) were determined from actual sound measurements performed by H&K on similar equipment and/or obtained from the equipment manufacturer.
- Then, noise reductions in dB per octave-band frequency due to any designated noise control measures for each source were subtracted from the estimated PWL.
- Next, octave-band SPLs for each source (with noise control) were determined by compensating for sound attenuation due to propagation (hemispherical radiation) and atmospheric sound absorption.
- Since sound shielding by buildings can influence the sound level contributed at the NSAs, we also included the sound shielding due to buildings, if appropriate.
- Finally, the estimated octave-band SPLs for each source (with noise control and other sound attenuation effects) were corrected for A-weighting, and the total SPLs of all sound sources were logarithmically summed and corrected for A-weighting to provide the estimated A-wt. sound level contributed at the specified distance(s) by the proposed replacement compressor unit.

Table E (p. C-5) show the calculation (i.e., spreadsheet analysis) of the estimated octave-band SPLs and the A-wt. sound level, at NSA #2 thru NSA #4, based upon the calculated sound level at NSA #1.

Source No. & Dist (Ft)	SOURCE PWL & EST'D. SOUND LEVEL CONTRIBUTIONS AT SPEC. DISTANCE	PWL or SPL in dB Per Octave-Band Center Freq. (Hz) 31.5	63	125	250	500	1000	2000	4000	8000	A-Wt. Level
1)	PWL of 3606 Eng.-Comp. Casing Noise	117	120	118	119	118	117	115	113	111	122
	PWL for (3) Units	122	125	123	124	123	122	120	118	116	127
	NR of Compressor Building	-12	-20	-25	-33	-40	-45	-45	-45	-45	
	Shielding	0	0	0	0	0	0	0	0	0	
1100	Hemispherical Radiation	-59	-59	-59	-59	-59	-59	-59	-59	-59	
	Atm. Absorption (70% R.H., 60 deg F)	0	0	0	0	-1	-2	-3	-8	-15	
	Source Sound Level Contribution	51	46	39	32	23	16	13	6	0	28
2)	PWL of 3606 Exhaust Noise	121	127	133	127	123	126	125	112	99	130
	PWL for 3 Units	126	132	138	132	128	131	130	117	104	135
	Atten of Exh. Silencer (Maxim M-51 Special)	-20	-32	-40	-46	-50	-50	-50	-40	-35	
	Misc. Atten.	0	0	0	0	0	0	0	0	0	
1100	Hemispherical Radiation	-59	-59	-59	-59	-59	-59	-59	-59	-59	
	Atm. Absorption (70% R.H., 60 deg F)	0	0	0	0	-1	-2	-3	-8	-15	
	Source Sound Level Contribution	47	41	39	27	18	20	18	10	0	27
3)	PWL of 3606 Exh. Duct & Muffler Body	89	87	85	83	81	81	81	77	77	87
	PWL for 3 Units	94	92	90	88	86	86	86	82	82	91
	NR of Noise Control	0	0	-3	-6	-12	-14	-14	-14	-14	
	Shielding	0	0	0	0	0	0	0	0	0	
1100	Hemispherical Radiation	-59	-59	-59	-59	-59	-59	-59	-59	-59	
	Atm. Absorption (70% R.H., 60 deg F)	0	0	0	0	-1	-2	-3	-8	-15	
	Source Sound Level Contribution	35	33	28	23	14	11	10	1	0	19
4)	PWL of 3606 Int. Noise w/ standard filter	87	83	81	81	82	83	84	93	84	95
	PWL for 3 Units	92	88	86	86	87	88	89	98	89	100
	NR of Inlet Silencer (or Cat Heavy - Duty)	-2	-4	-8	-14	-22	-22	-22	-22	-15	
	Shielding	0	0	0	0	0	0	0	0	0	
1100	Hemispherical Radiation	-59	-59	-59	-59	-59	-59	-59	-59	-59	
	Atm. Absorption (70% R.H., 60 deg F)	0	0	0	0	-1	-2	-3	-8	-15	
	Source Sound Level Contribution	31	25	19	13	5	5	5	9	0	14
5)	PWL of Eng. JW/AW/Gas Cooler (8200 fpm)	105	102	101	98	93	91	85	79	73	96
	PWL for 3 Units	110	107	106	103	98	96	90	84	78	100
	NR of Noise Control	0	0	0	0	0	0	0	0	0	
	Shielding / Directivity	-3	-5	-7	-12	-12	-12	-12	-12	-12	
1100	Hemispherical Radiation	-59	-59	-59	-59	-59	-59	-59	-59	-59	
	Atm. Absorption (70% R.H., 60 deg F)	0	0	0	0	-1	-2	-3	-8	-15	
	Source Sound Level Contribution	48	43	40	32	26	23	16	5	0	30
6)	PWL of Gas Piping	91	89	87	85	84	82	79	74	71	87
	PWL for 3 Units	96	94	92	90	89	87	84	79	76	91
	NR of Noise Control	0	0	0	0	0	0	0	0	0	
	Shielding	-2	-4	-6	-8	-8	-8	-8	-8	-8	
1100	Hemispherical Radiation	-59	-59	-59	-59	-59	-59	-59	-59	-59	
	Atm. Absorption (70% R.H., 60 deg F)	0	0	0	0	-1	-2	-3	-8	-15	
	Source Sound Level Contribution	35	31	27	23	21	18	14	4	0	23
Est'd Total Contribution of (3) 3606 Units		**54**	**49**	**44**	**36**	**29**	**27**	**22**	**14**	**8**	**33.8**

General Note: DIL, NR and PWL values on this spreadsheet should not be used as the specified values. Refer to the "Noise Control Measures" in the report or other company specifications for the actual specified PWL of equipment, noise reduction (NR) of pipe lagging or building construction, and DIL values of mufflers/silencers associated with the proposed equipment.

Table D1: Millennium CS (NY): Est'd Cont. at NSA #1 for (3) Cat 3606 Units

Source No. & Dist (Ft)	SOURCE PWL & EST'D. SOUND LEVEL CONTRIBUTIONS AT SPEC. DISTANCE	PWL or SPL in dB Per Octave-Band Center Freq. (Hz) 31.5	63	125	250	500	1000	2000	4000	8000	A-Wt. Level
1)	PWL of 3616 Eng.-Comp. Casing Noise	120	123	121	122	121	120	118	116	114	125
	PWL for 1 Unit	120	123	121	122	121	120	118	116	114	125
	NR of Compressor Building (24 ga.)	-12	-20	-25	-33	-40	-45	-45	-45	-45	
	Shielding	0	0	0	0	0	0	0	0	0	
1100	Hemispherical Radiation	-59	-59	-59	-59	-59	-59	-59	-59	-59	
	Atm. Absorption (70% R.H., 60 deg F)	0	0	0	0	-1	-2	-3	-8	-15	
	Source Sound Level Contribution	49	44	37	30	22	15	11	4	0	27
2)	PWL of 3616 Exhaust Noise	126	134	138	132	128	130	130	118	106	135
	PWL for 1 Unit	126	134	138	132	128	130	130	118	106	135
	Atten of Exhaust Silencer (M51 Special)	-22	-34	-44	-48	-52	-52	-52	-45	-40	
	Misc. Atten.	0	0	0	0	0	0	0	0	0	
1100	Hemispherical Radiation	-59	-59	-59	-59	-59	-59	-59	-59	-59	
	Atm. Absorption (70% R.H., 60 deg F)	0	0	0	0	-1	-2	-3	-8	-15	
	Source Sound Level Contribution	45	41	35	25	17	18	16	6	0	25
3)	PWL of 3616 Exh. Duct & Muffler Body	94	92	90	88	86	86	86	82	82	92
	PWL for 1 Unit	94	92	90	88	86	86	86	82	82	92
	NR of Noise Control	0	0	-3	-6	-12	-14	-14	-14	-14	
	Shielding	0	0	0	0	0	0	0	0	0	
1100	Hemispherical Radiation	-59	-59	-59	-59	-59	-59	-59	-59	-59	
	Atm. Absorption (70% R.H., 60 deg F)	0	0	0	0	-1	-2	-3	-8	-15	
	Source Sound Level Contribution	35	33	28	23	15	12	10	1	0	20
4)	PWL of 3616 Int. Noise w/ standard filter	90	86	84	84	85	86	87	96	87	98
	PWL for 1 Unit	90	86	84	84	85	86	87	96	87	98
	NR of Inlet Silencer (or Cat Heavy - Duty)	-2	-4	-8	-14	-22	-22	-22	-22	-15	
	Shielding	-2	-4	-6	-8	-8	-8	-8	-8	-8	
1100	Hemispherical Radiation	-59	-59	-59	-59	-59	-59	-59	-59	-59	
	Atm. Absorption (70% R.H., 60 deg F)	0	0	0	0	-1	-2	-3	-8	-15	
	Source Sound Level Contribution	27	19	11	3	0	0	0	0	0	8
5)	PWL of Eng. JW/AW Cooler (2 Fans)	96	94	93	90	85	83	78	71	65	88
	PWL for 1 Unit	96	94	93	90	85	83	78	71	65	88
	NR of Noise Control	0	0	0	0	0	0	0	0	0	
	Shielding / Directivity	-2	-4	-6	-8	-8	-8	-8	-8	-8	
1100	Hemispherical Radiation	-59	-59	-59	-59	-59	-59	-59	-59	-59	
	Atm. Absorption (70% R.H., 60 deg F)	0	0	0	0	-1	-2	-3	-8	-15	
	Source Sound Level Contribution	35	31	28	23	18	15	8	0	0	21
6)	PWL of Eng. Gas Cooler (2 Fans)	96	94	93	90	85	83	78	71	65	88
	PWL for 1 Unit	96	94	93	90	85	83	78	71	65	88
	NR of Noise Control	0	0	0	0	0	0	0	0	0	
	Shielding / Directivity	-3	-5	-7	-10	-10	-10	-10	-10	-10	
1100	Hemispherical Radiation	-59	-59	-59	-59	-59	-59	-59	-59	-59	
	Atm. Absorption (70% R.H., 60 deg F)	0	0	0	0	-1	-2	-3	-8	-15	
	Source Sound Level Contribution	34	30	27	21	16	13	6	0	0	19
7)	PWL of Gas Piping	92	90	88	86	85	83	80	75	72	88
	PWL for 1 Unit	92	90	88	86	85	83	80	75	72	88
	NR of Noise Control	0	0	0	0	0	0	0	0	0	
	Shielding	-3	-5	-7	-10	-10	-10	-10	-10	-10	
1100	Hemispherical Radiation	-59	-59	-59	-59	-59	-59	-59	-59	-59	
	Atm. Absorption (70% R.H., 60 deg F)	0	0	0	0	-1	-2	-3	-8	-15	
	Source Sound Level Contribution	30	26	22	17	16	13	8	0	0	18
Est'd Total Contribution of (1) 3616 Unit		**51**	**47**	**40**	**33**	**26**	**22**	**19**	**11**	**8**	**30.5**

General Note: DIL, NR and PWL values on this spreadsheet should not be used as the specified values. Refer to the "Noise Control Measures" in the report or other company specifications for the actual specified PWL of equipment, noise reduction (NR) of pipe lagging or building construction, and DIL values of mufflers/silencers associated with the proposed equipment.

Table D2: Millennium CS (NY): Est'd Cont. at NSA #1 for (1) Cat 3616 Unit

Source No. & Dist (Ft)	SOURCE PWL & EST'D. SOUND LEVEL CONTRIBUTIONS AT SPEC. DISTANCE	PWL or SPL in dB Per Octave-Band Center Freq. (Hz) 31.5	63	125	250	500	1000	2000	4000	8000	A-Wt. Level
1)	PWL of 3616 Eng.-Comp. Casing Noise	120	123	121	122	121	120	118	116	114	125
	PWL for 3 Units	125	128	126	127	126	125	123	121	119	130
	NR of Compressor Building	-12	-20	-25	-33	-40	-45	-45	-45	-45	
	Shielding	0	0	0	0	0	0	0	0	0	
1100	Hemispherical Radiation	-59	-59	-59	-59	-59	-59	-59	-59	-59	
	Atm. Absorption (70% R.H., 60 deg F)	0	0	0	0	-1	-2	-3	-8	-15	
	Source Sound Level Contribution	54	49	42	35	26	19	16	9	0	31
2)	PWL of 3616 Exhaust Noise	126	134	138	132	128	130	130	118	106	135
	PWL for 3 Units	131	139	143	137	133	135	135	123	111	139
	Atten of Exhaust Silencer (M51 Special)	-22	-34	-44	-48	-52	-52	-52	-45	-40	
	Misc. Atten.	0	0	0	0	0	0	0	0	0	
1100	Hemispherical Radiation	-59	-59	-59	-59	-59	-59	-59	-59	-59	
	Atm. Absorption (70% R.H., 60 deg F)	0	0	0	0	-1	-2	-3	-8	-15	
	Source Sound Level Contribution	50	46	40	30	21	22	21	11	0	29
3)	PWL of 3616 Exh. Duct & Muffler Body	94	92	90	88	86	86	86	82	82	92
	PWL for 3 Units	99	97	95	93	91	91	91	87	87	96
	NR of Noise Control	0	0	-3	-6	-12	-14	-14	-14	-14	
	Shielding	0	0	0	0	0	0	0	0	0	
1100	Hemispherical Radiation	-59	-59	-59	-59	-59	-59	-59	-59	-59	
	Atm. Absorption (70% R.H., 60 deg F)	0	0	0	0	-1	-2	-3	-8	-15	
	Source Sound Level Contribution	40	38	33	28	19	16	15	6	0	24
4)	PWL of 3616 Int. Noise w/ standard filter	90	86	84	84	85	86	87	96	87	98
	PWL for 3 Units	95	91	89	89	90	91	92	101	92	103
	NR of Inlet Silencer (or Cat Heavy - Duty)	-2	-4	-8	-14	-22	-22	-22	-22	-15	
	Shielding	-2	-4	-6	-8	-8	-8	-8	-8	-8	
1100	Hemispherical Radiation	-59	-59	-59	-59	-59	-59	-59	-59	-59	
	Atm. Absorption (70% R.H., 60 deg F)	0	0	0	0	-1	-2	-3	-8	-15	
	Source Sound Level Contribution	32	24	16	8	0	0	0	4	0	10
5)	PWL of Eng. JW/AW Cooler (2 Fans)	96	94	93	90	85	83	78	71	65	88
	PWL for 3 Units	101	99	98	95	90	88	83	76	70	93
	NR of Noise Control	0	0	0	0	0	0	0	0	0	
	Shielding / Directivity	-2	-4	-6	-8	-8	-8	-8	-8	-8	
1100	Hemispherical Radiation	-59	-59	-59	-59	-59	-59	-59	-59	-59	
	Atm. Absorption (70% R.H., 60 deg F)	0	0	0	0	-1	-2	-3	-8	-15	
	Source Sound Level Contribution	40	36	33	28	22	19	13	1	0	25
6)	PWL of Eng. Gas Cooler (2 Fans)	96	94	93	90	85	83	78	71	65	88
	PWL for 3 Units	101	99	98	95	90	88	83	76	70	93
	NR of Noise Control	0	0	0	0	0	0	0	0	0	
	Shielding / Directivity	-3	-5	-7	-10	-10	-10	-10	-10	-10	
1100	Hemispherical Radiation	-59	-59	-59	-59	-59	-59	-59	-59	-59	
	Atm. Absorption (70% R.H., 60 deg F)	0	0	0	0	-1	-2	-3	-8	-15	
	Source Sound Level Contribution	39	35	32	26	20	17	11	0	0	23
7)	PWL of Gas Piping	92	90	88	86	85	83	80	75	72	88
	PWL for 3 Units	97	95	93	91	90	88	85	80	77	92
	NR of Noise Control	0	0	0	0	0	0	0	0	0	
	Shielding	-3	-5	-7	-10	-10	-10	-10	-10	-10	
1100	Hemispherical Radiation	-59	-59	-59	-59	-59	-59	-59	-59	-59	
	Atm. Absorption (70% R.H., 60 deg F)	0	0	0	0	-1	-2	-3	-8	-15	
	Source Sound Level Contribution	30	26	22	17	16	13	8	0	0	18
Est'd Total Contribution of (3) 3616 Units		**56**	**51**	**45**	**37**	**30**	**27**	**23**	**14**	**8**	**34.8**

General Note: DIL, NR and PWL values on this spreadsheet should not be used as the specified values. Refer to the "Noise Control Measures" in the report or other company specifications for the actual specified PWL of equipment, noise reduction (NR) of pipe lagging or building construction, and DIL values of mufflers/silencers associated with the proposed equipment.

Table D3: Millennium CS (NY): Est'd Cont. at NSA #1 for (3) Cat 3616 Units

NSA	EST'D LEVEL AT NSA #2 THRU NSA #4		SPL in dB Per Octave-Band Center Freq. (Hz)									A-Wt.
			31.5	63	125	250	500	1000	2000	4000	8000	Level
NSA #2 (Case 1)	Estimated SPL at NSA #1 (Case 1)	1100	56	51	46	37	31	28	24	16	11	35.5
	Shielding		0	0	0	0	0	0	0	0	0	
	Divergence Loss to NSA #2	1900	-5	-5	-5	-5	-5	-5	-5	-5	-5	
	Atm. Absorption (70% R.H., 60 deg F)		0	0	0	0	-1	-1	-2	-6	-11	
	Estimated SPL at NSA #2 (Case 1)		51	46	41	32	26	22	17	5	0	30.1
NSA #3 (Case 1)	Estimated SPL at NSA #1 (Case 1)	1100	56	51	46	37	31	28	24	16	11	35.5
	Shielding		0	0	0	0	0	0	0	0	0	
	Divergence Loss to NSA #3	1800	-4	-4	-4	-4	-4	-4	-4	-4	-4	
	Atm. Absorption (70% R.H., 60 deg F)		0	0	0	0	0	-1	-2	-5	-10	
	Estimated SPL at NSA #3 (Case 1)		51	46	41	33	26	23	17	6	0	30.7
NSA #4 (Case 1)	Estimated SPL at NSA #1 (Case 1)	1100	56	51	46	37	31	28	24	16	11	35.5
	Shielding		0	0	0	0	0	0	0	0	0	
	Divergence Loss to NSA #4	2000	-5	-5	-5	-5	-5	-5	-5	-5	-5	
	Atm. Absorption (70% R.H., 60 deg F)		0	0	0	0	-1	-1	-3	-7	-12	
	Estimated SPL at NSA #4 (Case 1)		50	45	40	32	25	21	16	4	0	29.6
NSA #2 (Case 2)	Estimated SPL at NSA #1 (Case 2)	1100	58	53	47	40	33	30	26	17	11	37.4
	Shielding		0	0	0	0	0	0	0	0	0	
	Divergence Loss to NSA #2	1900	-5	-5	-5	-5	-5	-5	-5	-5	-5	
	Atm. Absorption (70% R.H., 60 deg F)		0	0	0	0	-1	-1	-2	-6	-11	
	Estimated SPL at NSA #2 (Case 2)		53	48	43	34	27	24	19	7	0	32.0
NSA #3 (Case 2)	Estimated SPL at NSA #1 (Case 2)	1100	58	53	47	40	33	30	26	17	11	37.4
	Shielding		0	0	0	0	0	0	0	0	0	
	Divergence Loss to NSA #3	1800	-4	-4	-4	-4	-4	-4	-4	-4	-4	
	Atm. Absorption (70% R.H., 60 deg F)		0	0	0	0	0	-1	-2	-5	-10	
	Estimated SPL at NSA #3 (Case 2)		54	49	43	35	28	24	19	8	0	32.5
NSA #4 (Case 2)	Estimated SPL at NSA #1 (Case 2)	1100	58	53	47	40	33	30	26	17	11	37.4
	Shielding		0	0	0	0	0	0	0	0	0	
	Divergence Loss to NSA #4	2000	-5	-5	-5	-5	-5	-5	-5	-5	-5	
	Atm. Absorption (70% R.H., 60 deg F)		0	0	0	0	-1	-1	-3	-7	-12	
	Estimated SPL at NSA #4 (Case 2)		53	48	42	34	27	23	18	5	0	31.5

Table E: Millennium CS (NY): Estimated Contribution at NSA #2 thru NSA #4 for Case 1 & 2

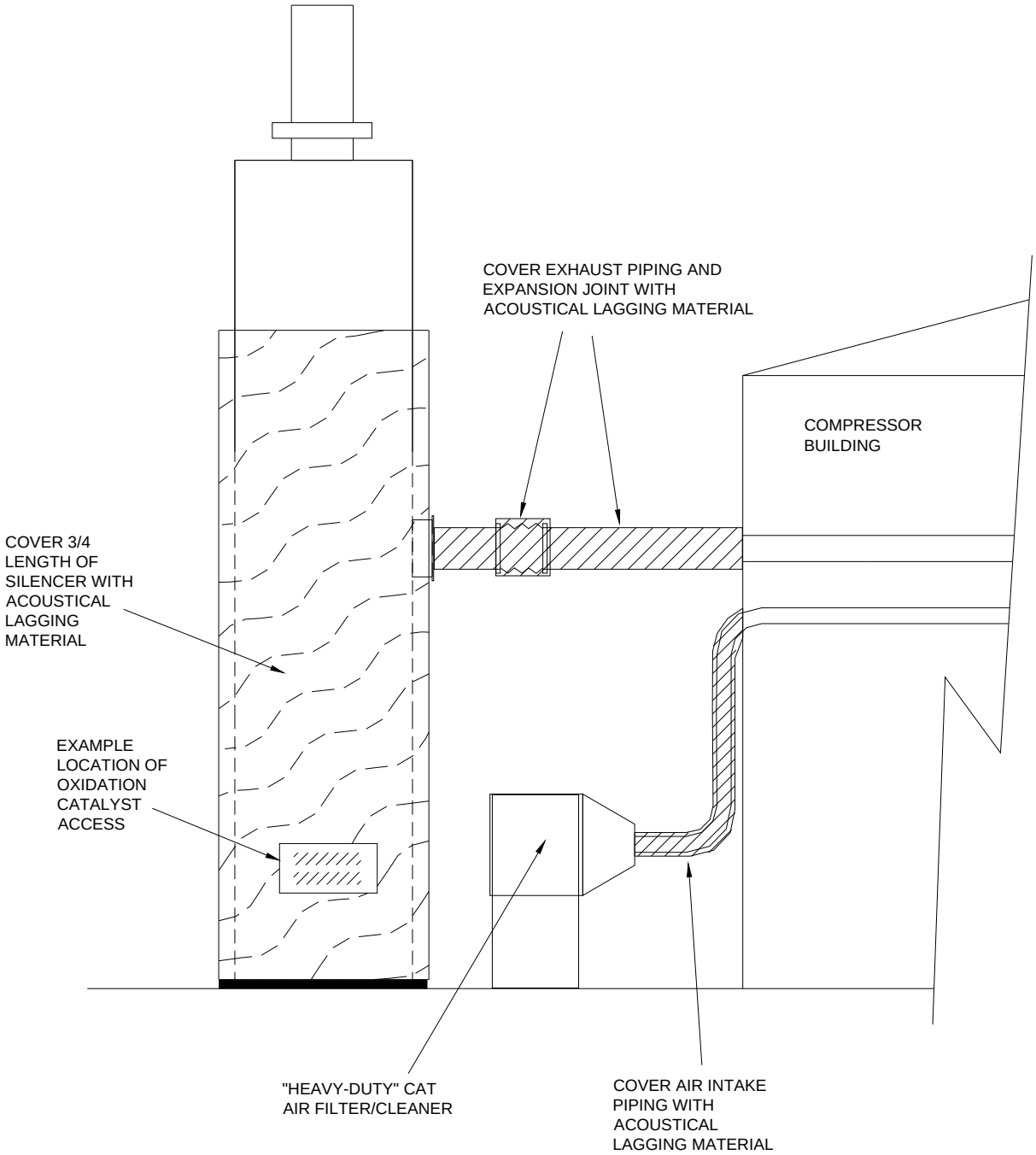

Figure 3: **Noise Control Detail for Cat 3616 Exhaust and Intake Systems**

Summary of Typical Metrics for Regulating Environmental Noise & Acoustical Terminology Discussed in the Report

(1) Decibel (dB): A unit for expressing the relative power level difference between acoustical or electrical signals. It is ten times the common logarithm of the ratio of two related quantities that are proportional to power. When adding dB or dBA values, the values must be added logarithmically. For example, the logarithmic addition of **35 dB** plus **35 dB** is **38 dB**.

(2) Human Perception of Change in Sound Level

- A **3 dB** change of sound level is barely perceivable by the human ear
- A **5 or 6 dB** change of sound level is noticeable
- If sound level increases by **10 dB**, it appears as if the sound intensity has doubled.

(3) A-Weighted Sound Level (dBA): The A-wt. sound level is a single-figure sound rating, expressed in decibels, which correlates to the human perception of the loudness of sound. The dBA level is commonly used to measure industrial and environmental noise since it is easy to measure and provides a reasonable indication of the human annoyance value of the noise. The dBA measurement is not a good descriptor of a noise consisting of strong low-frequency components or for a noise with tonal components.

(4) Background or Ambient Noise: The total noise produced by all other sources associated with a given environment in the vicinity of a specific sound source of interest, and includes any Residual Noise.

(5) Sound Pressure Level (L_p or SPL): Ten times the common logarithm to the base 10 of the ratio of the mean square sound pressure to the square of a reference pressure. Therefore, the sound pressure level is equal to 20 times the common logarithm of the ratio of the sound pressure to a reference pressure (20 micropascals or 0.0002 microbar).

(6) Octave Band Sound Pressure Level (SPL): Sound is typically measured in frequency ranges (e.g., high-pitched sound, low-pitched sound, etc.) that provides more meaningful sound data regarding the sound character of the noise. When measuring two noise sources for comparison, it is better to measure the spectrum of each noise, such as in octave band SPL frequency ranges. Then, the relative loudness of two sounds can be compared frequency range by frequency range. As an illustration, two noise sources can have the same dBA rating and yet sound completely different. For example, a high-

pitched sound concentrated at a frequency of 2000 Hz could have the same dBA rating as a much louder low-frequency sound concentrated at 50 Hz.

(7) Daytime Sound Level (L_d) & Nighttime Sound Level (L_n): L_d is the equivalent A-weighted sound level, in decibels, for a 15 hour time period, between 07:00 to 22:00 Hours (7:00 a.m. to 10:00 p.m.). L_n is the equivalent A-weighted sound level, in decibels, for a 9 hour time period, between 22:00 to 07:00 Hours (10:00 p.m. to 7:00 a.m.).

(8) Equivalent Sound Level (L_{eq}): The equivalent sound level (L_{eq}) can be considered an average sound level measured during a period of time, including any fluctuating sound levels during that period. In this report, the L_{eq} is equal to the level of a steady (in time) A-weighted sound level that would be equivalent to the sampled A-weighted sound level on an energy basis for a specified measurement interval. The concept of the measuring L_{eq} has been used broadly to relate individual and community reaction to aircraft and other environmental noises.

(9) Day-Night Sound Level (L_{dn}): The L_{dn} is an energy average of the measured daytime L_{eq} (L_d) and the measured nighttime L_{eq} (L_n) plus **10 dB**. The **10-dB** adjustment to the L_n is intended to compensate for nighttime sensitivity. As such, the L_{dn} is not a true measure of the sound level but represents a skewed average that correlates generally with past sound surveys which attempted to relate environmental sound levels with physiological reaction and physiological effects. For a steady sound source that operates continuously over a 24-hour period and controls the environmental sound level, an L_{dn} is approx. **6.4 dB** above the measured L_{eq}.

(10) Sound Level Meter (SLM): An instrument used to measure sound pressure level, sound level, octave-band SPL, or peak sound pressure level, separately or in any combinations thereof. The measured weighted SPL (i.e., A-Wt. Sound Level or dBA) is obtained by the use of a SLM having a standard frequency-filter for attenuating part of the sound spectrum.

SOUND LEVELS FOR TYPICAL ACTIVITIES **REFERENCE AND COMMUNITY RESPONSES**

Subjective Human Response and Conversation	Home and Industrial (Indoor Noise)	**dBA Scale (Level)**	Community and Traffic (Outdoor Noise)	Reference Loudness	Community Reaction To Outdoor Noise
		-- 140 --	Aircraft Carrier		
Threshold of Pain			Military Jet Aircraft		
		-- 130 --			
			Large Siren at 100 Ft.		
			Jet Takeoff at 200 Ft.	16 Times	
	Rock Band (Max.)	**-- 120 --**		as Loud	
Threshold of			Thunderstorm Activity		
Discomfort	Discotheque (Max.)			8 Times	
		-- 110 --	Elevated Train	as Loud	
	Symphonic Music (Max.)				
Maximum Vocal Effort			Auto Horn at 5 Ft.	4 Times	
	Industrial Plant	**-- 100 --**		as Loud	
Very Loud			Compacting Trash Truck		
	Newspaper Printing Rm.			2 Times	
Shouting in Ear		**-- 90 --**	Heavy Truck at 25 Ft.	as Loud	Vigorous Action
	Food Blender				and Law Suits
	Symphonic Music (Typ.)		Motorcycle at 25 Ft.	Reference	
Shouting		**-- 80 --**		Loudness	Threats of
	Garbage Disposal		Small Truck at 25 Ft.		Legal Action
Very Annoying	Alarm Clock		Heavy Traffic at 50 Ft.		Appeals to Officials
		-- 70 --		1/2 as Loud	Widespread
Moderately Loud	Vacuum Cleaner		Avg. Traffic at 100 Ft.		Complaints
	Electric Typewriter				
Normal Conversation		**-- 60 --**		1/4 as Loud	Sporadic Complaints
	Air Conditioner at 20 Ft.				
			Light Traffic at 100 Ft.		No Reaction,
	Typical Office	**-- 50 --**		1/8 as Loud	Although Noise
Quiet					is Noticeable
	Living Room		Typical Suburban Area		
	Bedroom	**-- 40 --**			
			Birdsong		
Very Quiet	Library				
		-- 30 --			
Soft Whisper	Broadcasting Studio		Rural Area		
				Just Audible	
		-- 20 --			
				Threshold	
		-- 10 --		of Hearing	
Hoover & Keith Inc. (Consultants in Acoustics)					
11391 Meadowglen, Suite D					
Houston, Texas 77082		**-- 0 --**			

-end of report-

ATTACHMENT 5

SERVICE: CATALYTIC EXHAUST SILENCER
FOR CATERPILLAR 3606 GAS ENGINE

SILENCER INSERTION LOSS: 50 dBA OVERALL

OCTAVE BAND	31.5	63	125	250	500	1K	2K	4K	8K
MAXIMUM SILENCED SPL	85	90	85	80	75	73	72	68	60

AT 3 FEET, 90° (EQUIVALENT TO 79 DBA OVERALL)

SILENCED EXHAUST NOISE: 79 dBA AT 3 FEET
(SEE ABOVE)

PRESSURE DROP: 5.6" H2O
(@ 20,800 LB/HR, 878°F, 14.4 PSIA)
(1.5" ACROSS CATALYST PANELS
INCLUDED IN THE ABOVE)

MATERIALS OF CONSTRUCTION:
SHELL: 3/16" CARBON STEEL
HEADS AND BAFFLES: 1/4"CARBON STEEL
CATALYST BED PLATE: 1/2" CARBON STEEL
CATALYST PANELS: (6) 304SS
3.7"x15.435"x24.75"

WEIGHT: 11,600 LBS

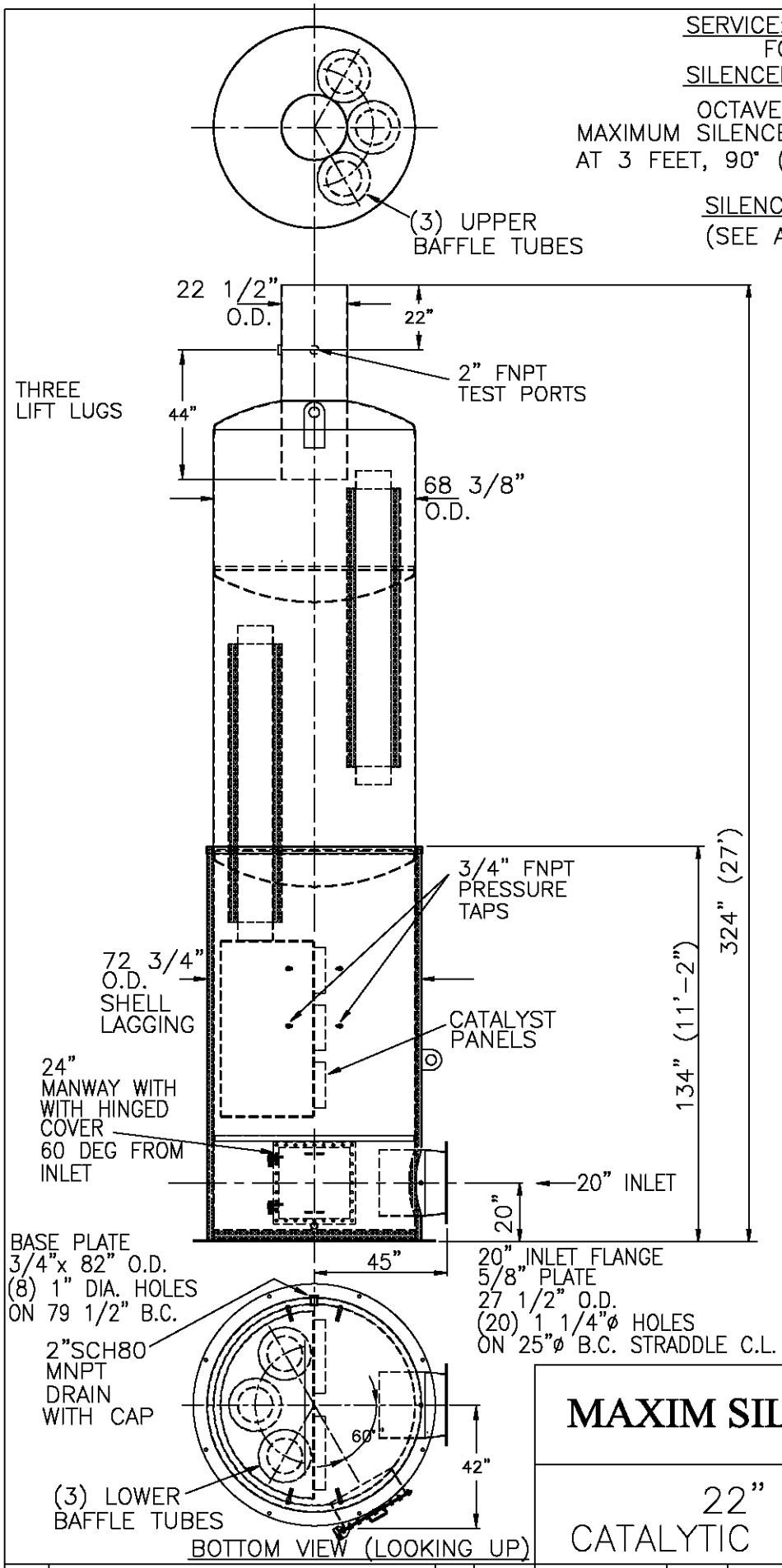

CERTIFICATION

CUSTOMER: WILLIAMS FIELD SERVICES

CUSTOMER P.O. NO.: 194726

DATE: 08/20/12 BY: MA

MAXIM SILENCERS

10635 BRIGHTON LANE
STAFFORD, TX. 77477
PHONE (832) 554-0980
FAX (832) 554-0990

22" MCCOS 600 CATALYTIC EXHAUST SILENCER

NO.	REVISIONS	BY	DATE						
B	ROTATED MANWAY BY 120 DEG	MA	8/24	DRAWN	TJW	8/16/12	ORDER NO.	DRAWING NO.	REV
A	ADDED TESTPORTS, LENGTH INCREASED TO 27'	MA	8/23	CHECKED			416113-01	145-8A14279	B
				APPROVED	TJW	8/16/12			

NOTE:

DRAWING FOR OUTLET FLANGE AND TAIL PIPE MODIFICATION. SILENCER IS ALREADY ON SITE.

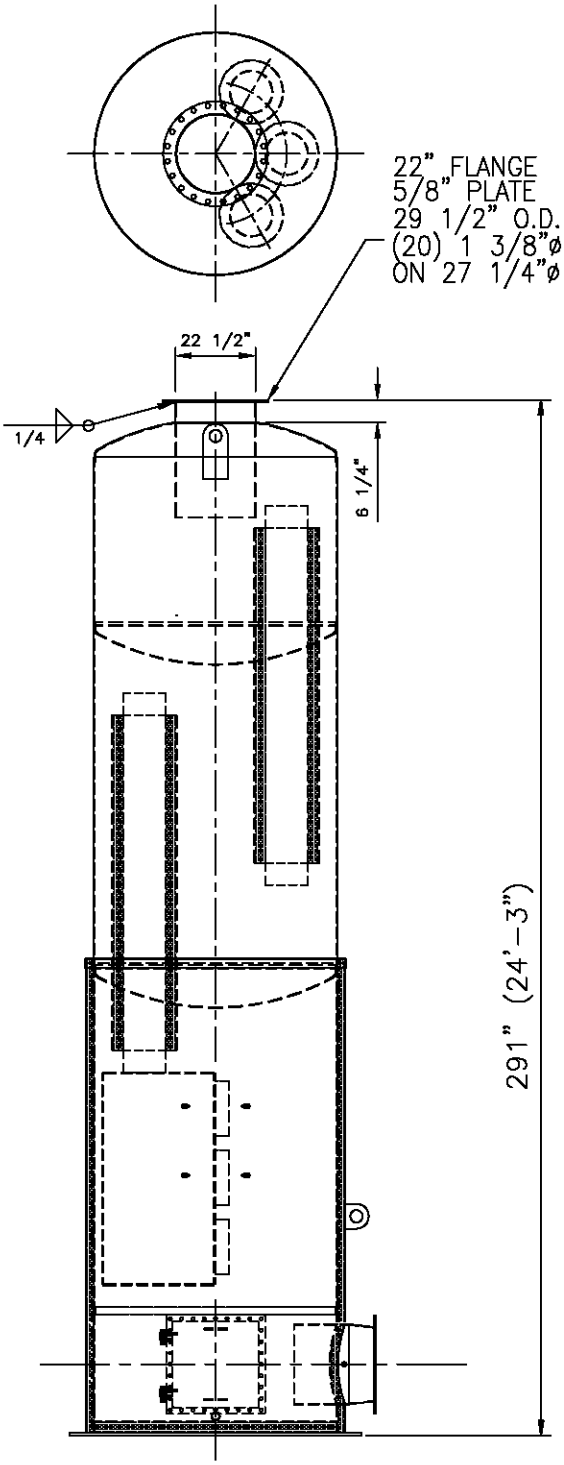

BOTTOM VIEW (LOOKING UP)

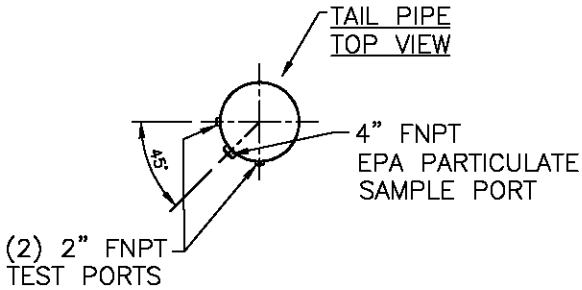

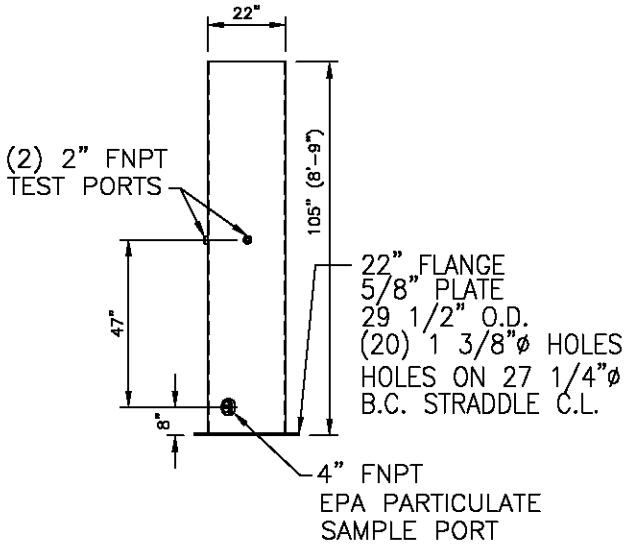

TAIL PIPE

(TAIL PIPE EST. WEIGHT: 650 LBS)

CERTIFICATION

CUSTOMER: .

CUSTOMER P.O. NO.: .

DATE: . BY: .

MAXIM SILENCERS

10635 BRIGHTON LANE
STAFFORD, TX. 77477
PHONE (832) 554-0980
FAX (832) 554-0990

22" MCCOS 600
CATALYTIC EXHAUST SILENCER

NO.	REVISIONS	BY	DATE
B	LENGTH REDUCED BY 24"	MA	3/20/13
A	ADJUSTED TAIL PIPE PORTS.	TF	3/18/13

DRAWN	TF	3/14/13	ORDER NO.	DRAWING NO.	REV
CHECKED	MA	3/14/13	.	145-8A14632	B
APPROVED	MA	3/14/13			

Maxim Silencers, Inc.
10635 Brighton Lane
Stafford, Texas 77477
Phone: 832 554-0980
Fax: 832 554-0990

Emission Control Application Data Sheet

January 26, 2012

Customer:		Project:		Date:	**8/24/2012**
Sales Person:		Site Elevation:	ft	Contact:		Order/Quote #:	**0**

Engine Data:

Engine Model:	**Caterpillar G3606**		Speed:	**1000**	RPM
Fuel & Operating Type:	**Natural Gas Lean Burn**		Engine Power:	**1775**	Hp
				0	KW
Exhaust Flow Rate:	**12146**	**acfm**	Exhaust Temperature:	**752**	°F
	20636	**m^3/hr**		**400**	°C
	23811	**lbs/hr**			

QAC (Quick Access Catalyst) Data:

Number of Cores:	**6**				
Model:	**MCCOS-600-22**		Inlet Size:	**22**	in
Grade:	**Hospital Plus**		Outlet Size:	**22**	in
Body Diameter:	**72.75**	in	Body Length:	**324**	in
Estimated weight:	**11600**	lbs	Estimated Back Pressure:	**5.62**	in of WC
	5263	Kg		**14.0**	mbar
			Speed through inlet:	**4729**	ft/min

Emission:

Min. Temp. at Core Face:	**752**	°F	**400**	°C	Catalyst Type:	**Oxidation**
Max. Temp. at Core Face:	**937**	°F	**503**	°C		

	Pollutant						
	NOx	CO	NMNEHC/VOC	H_2CO			
Engine Out / Pre Emission:	**0.5**	**2.75**	**0.63**	**0.4**	g/bhp-hr		
Post Emission:	**0.500**	**0.060**	**0.200**	**0.0070**	g/bhp-hr		
	0.0	***97.8***	***68.3***	***98.3***	% Reduction		
	1.96	0.23	0.78	0.03	lb/hr		
	8.57	1.03	3.43	0.12	tons/year operation	**8760**	hr/year
	50.9	6.1	20.3	0.7	ppmv		
	30.6	3.7	12.2	0.4	ppmvd @ 15% O2		

Acoustics:

Frequency Band (Hz):	63	125	250	500	1000	2000	4000	8000	
Estimated Attenuation (dB):	**N/A**	**N/A**	**N/A**	**N/A**	**N/A**	**N/A**	**N/A**	**N/A**	No Element
Plus:	**90**	**85**	**80**	**75**	**73**	**72**	**68**	**60**	One Element Layer

Warranty & Notes:

- **If Pre-Emission levels are not as noted above, contact Maxim for a re-quote.**
- To achieve Post Emissions levels detailed above, exhaust temperature and Pre-Emission data must be as specified.
- Maximum allowable exhaust temperature at core face is 1350°F.
- If applicable, the engine will require an air/fuel ratio controller to meet above emission levels. For Rich Burn engines λ must be 0.96 - 0.99.
- Catalyst cleaning/regeneration required, if initial backpressure increases by 2" of WC.
- Engine operation to be stable and reproducible.
- QAC is not designed to withstand a backfire, therefore measures should be taken prior to QAC unit to alleviate backfire pressure.
- Maximum lubrication oil consumption rate to be less than 0.0015 lb/bhp/hr.
- Lube oil sulfate ash contents should not exceed 0.5%.
- Phosphorus and/or Zinc should not exceed 5 ppmv in the exhaust stream.
- A high temperature alarm/shutdown to be maintained at downstream of catalyst at 1300°F.
- Fuel not to contain heavy or transition metals such as Pb, Ar, Zn, Cu, Sn, Fe, Ba, Ni, Cr etc.
- Chlorinated or Silicone containing compounds in the exhaust not to exceed 1 ppmv.
- Sulfur compounds in the exhaust gas stream not to exceed 25 ppmv.
- Performance guarantee is voided should the catalyst become masked or de-activated by any contaminant in the exhaust stream.
- Engine to be maintained and operated in accordance within manufacturer's recommended practice.
- Under no condition will Maxim Silencers Inc. assume any contingent liabilities.
- Operating manual is available online at www.maximsilencers.com or contact a Maxim sales representative.
- Nomenclature: QAC4-292-8, 4 is grade (Super Critical), 29 is catalyst block size, 2 is no. of catalyst(s) and 8 is flange diameter.
- Maxim's standard one year warranty applies.

NOTES :

SERVICE: CATALYTIC EXHAUST SILENCER FOR CATERPILLAR 3616 GAS ENGINE

NOISE REDUCTION OF TWO SILENCERS IN SERIES: 50 dBA

PRESSURE DROP: 7.5" H2O
(@ 55900 LB/HR, 838°F, 1820 FT ELEV)

MATERIALS OF CONSTRUCTION:
SHELL: 3/16" CARBON STEEL
HEADS AND BAFFLES : 1/4" CARBON STEEL
CATALYST BED PLATE: 1/2" CARBON STEEL
CATALYST PANELS: (12) 304SS
3.7"x15.435"x24.75"

EXTERNAL PAINT:
SANDBLAST TO SSPC-SP10 (NEAR WHITE)
PAINT WITH (1) COAT INORGANIC ZINC

INTERNAL PAINT: NONE

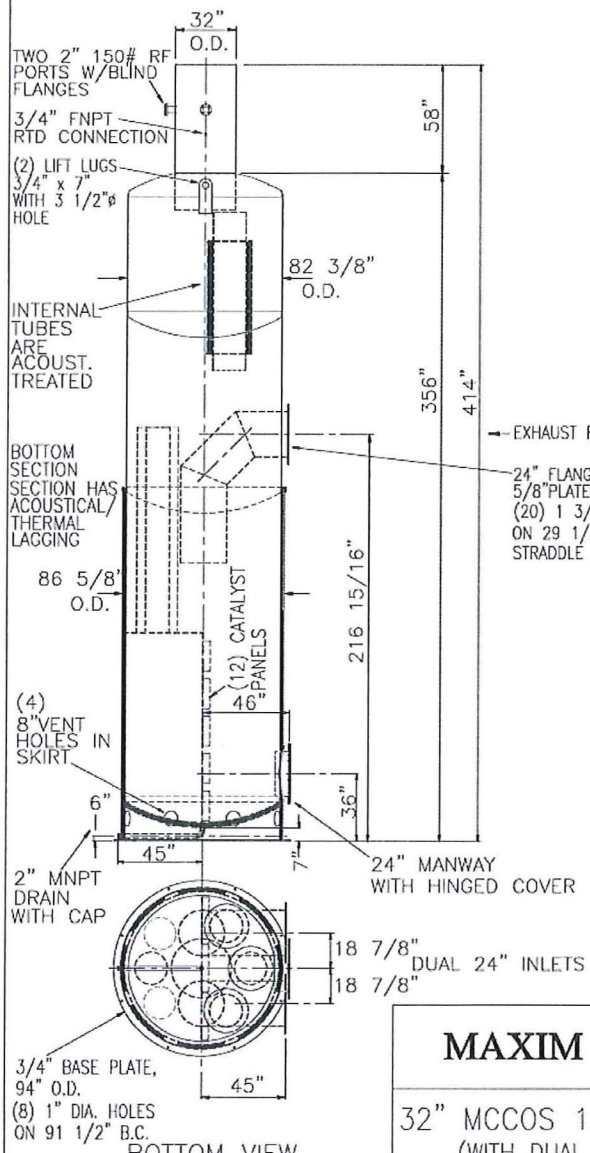

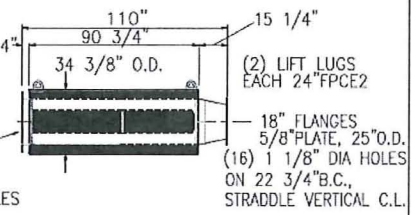

(2) 24"FPCE2 UPSTREAM SILENCERS WITH 18" INLET FLANGE AND 24" OUTLET FLANGE

WEIGHT:

32"MCCOS-1200	17000 LBS
(2) 24"FPCE-2	2400 LBS (1200 LBS EACH)

CERTIFICATION

CUSTOMER: SEC ENERGY PRODUCTS & SERVICES

CUSTOMER P.O. NO.: 25786

DATE: 9/23/2010 BY: Tom Waxham

MAXIM SILENCERS

10635 BRIGHTON LANE
STAFFORD, TX. 77477
PHONE (832) 554-0980
FAX (832) 554-0990

32" MCCOS 1200 CATALYTIC EXHAUST SILENCER
(WITH DUAL 24"FPCE-2 UPSTREAM SILENCERS)

				DRAWN	TJW	9/10/10	ORDER NO.	DRAWING NO.	REV
A	CERTIFIED FOR 411788	TJW	9/23/10	CHECKED			411788-01	A091010	A
NO.	REVISIONS	BY	DATE	APPROVED	TJW	9/10/10			

MAXIM SILENCERS

Emission Control Application Data Sheet

Maxim Silencers, Inc.
10836 Brighton Lane
Stafford, Texas 77477
Phone: 832 554-0990
Fax: 832 554-0990

Customer:		Project:	
Date:	1/7/2011		
Sales Person:		Site Elevation:	ft
Contact:		Order/Quote #:	0

Matt Wolt
MAXIM Silencers Inc.
7, JAN. 2011

Engine Data:

Engine Model:	Caterpillar G3616		Speed:	1000	RPM
Fuel & Operating Type:	Natural Gas Lean Burn		Engine Power:	4735	Hp KW
Exhaust Flow Rate:	32100 54538 62929	acfm m^3/hr lbs/hr	Exhaust Temperature:	752 400	°F °C

QAC (Quick Access Catalyst) Data:

Number of Cores:	12				
Model:	MCCOS-1200		Inlet Size:	(2) 18	in
Grade:	Hospital Plus		Outlet Size:	32	in
Body Diameter:	86.625	in	Body Length:	414	in
Estimated weight:	20400 9256	lbs Kg	Estimated Back Pressure:	6.87 17.1	in of WC mbar
			Speed through Inlet:	5931	ft/min

Emission:

Min. Temp. at Core Face:	752	°F	400	°C	Catalyst Type:	Oxidation
Max. Temp. at Core Face:	946	°F	508	°C		

	Pollutant					
	NOx	CO	NMNEHC/VOC	H-CO		
Engine Out / Pre Emission:	0.5	2.75	0.63	0.4	g/bhp-hr	
Post Emission:	0.500	0.05	0.20	0.0056	g/bhp-hr	
	0.0	*98.3*	*69.0*	*98.6*	% Reduction	
	5.22	0.49	2.04	0.06	lb/hr	
	22.86	2.14	8.93	0.26	tons/year operation	8760 hr/year
	51.3	4.8	20.1	0.6	ppmv	
	28.3	2.6	11.0	0.3	ppmvd @ 15% O2	

Acoustics:

Frequency Band (Hz):	63	125	250	500	1000	2000	4000	8000	
Estimated Attenuation (dB):	28	46	44	42	45	48	47	45	No Element
Plus:	29	54	52	50	52	53	53	52	One Element Layer
	n/a	n/a	n/a	n/a	n/a	n/a	n/a	n/a	

Warranty & Notes:

- If Pre-Emission levels are not as noted above, contact Maxim for a re-quote.
- To achieve Post Emissions levels detailed above, exhaust temperature and Pre-Emission data must be as specified.
- Maximum allowable exhaust temperature at core face is 1350°F.
- If applicable, the engine will require an air/fuel ratio controller to meet above emission levels. For Rich Burn engines λ must be 0.95 - 0.99.
- Catalyst cleaning/regeneration required, if initial backpressure increases by 2" of WC.
- Engine operation to be stable and reproducible.
- QAC is not designed to withstand a backfire, therefore measures should be taken prior to QAC unit to alleviate backfire pressure.
- Maximum lubrication oil consumption rate to be less than 0.0015 lb/bhp/hr.
- Lube oil sulfate ash contents should not exceed 0.5%.
- Phosphorus and/or Zinc should not exceed 5 ppmv in the exhaust stream.
- A high temperature alarm/shutdown to be maintained at downstream of catalyst at 1300°F.
- Fuel not to contain heavy or transition metals such as Pb, Ar, Zn, Cu, Sn, Fe, Ba, Ni, Cr etc
- Chlorinated or Silicone containing compounds in the exhaust not to exceed 1 ppmv.
- Sulfur compounds in the exhaust gas stream not to exceed 25 ppmv.
- Performance guarantee is voided should the catalyst become masked or de-activated by any contaminant in the exhaust stream.
- Engine to be maintained and operated in accordance with manufacturer's recommended practice.
- Under no condition will Maxim Silencers Inc. assume any contingent liabilities.
- Operating manual is available online at www.maximsilencers.com or contact a Maxim sales representative.
- Nomenclature: QAC4-20/2-B, 4 is grade (Super Critical), 20 is catalyst block size, 2 is no. of catalyst(s) and B is flange diameter.
- Maxim's standard one year warranty applies.
- CO may start to form at low GHSV.

ATTACHMENT 6

HOOVER & KEITH INC.

ACOUSTICS & NOISE CONTROL ENGINEERING

11391 MEADOWGLEN, SUITE D
HOUSTON, TEXAS 77082
(281)496-9876 FAX: (281)496-0016

37685 BAYWOOD
FARMINGTON HILLS, MICHIGAN 48335
(248)473-8722 FAX: (248)473-8785

h&k

DATE: June 4, 2012

TO: Don Fernald / Dale Ann Buchanan
Williams Midstream ABA
1212 South Abington Road
Clarks Summit, PA 18411
(570) 996-4024 / (570) 205-9061

FROM: Brian Hellebuyck, PE
Hoover and Keith, Inc.
37685 Baywood
Farmington Hills, MI 48335
(248) 473-8722

SUBJECT: **Williams Midstream ABA / Laser Northeast Gathering Company**
Dunbar Compressor Station – Noise Mitigation Measures
H&K JN 4517

REPORT SUMMARY

As documented in the Article VII Sound Survey for Units 1-4[1], the Dunbar Station is exceeding the Windsor Township property line criteria, at some locations, and the NYPSC criteria in the north direction during operation of all compressor units (i.e., Units 1-4).

As also documented in the Article VII Sound Survey, the Dunbar Compressor Station is in compliance with both the nighttime Windsor Township property line criteria, at all locations, and the NYPSC criteria, at all locations, during operation of Unit 4. Because the Town of Windsor daytime criteria is less stringent than the nighttime criteria, compliance with the nighttime criteria ensures that the Station is in compliance with the Town of Windsor daytime criteria for Unit 4.

The Order Granting Certificate of Environmental Compatibility and Public Need for NYPSC CASE 10-T-0350 (Issued and Effective February 22, 2011) requires that the Applicant propose a mitigation plan for NYPSC approval should actual measured levels exceed the levels described herein[2]. In accordance with the NYPSC requirement:

- This report identifies the necessary noise mitigation measures to bring the current Dunbar Compressor Station (i.e., Units 1-4) into compliance with the NYPSC requirements, which includes the Town of Windsor noise requirements.
- This reports strengthens the current noise mitigation measures for prospective Units 5-6, so that the future Dunbar Compressor Station (i.e., Units 1-6) will comply with the NYPSC requirements, which includes the Town of Windsor noise requirements.

[1] Williams Midstream ABA / Laser Northeast Gathering Company, Dunbar Compressor Station, NYPSC Article VII Sound Survey for Units 1-4, June 4, 2012.
[2] NYPSC Order (Feb. 22, 2011) p. 64.

Existing Units 1-3 – Vertical Coolers

The original noise impact analysis (i.e., "Analysis")[3] assumed that the compressor building would tightly seal around the vertical coolers to control compressor building breakout noise. However, the final installation detail failed to tightly seal the bottom portion of the vertical cooler.

Therefore, to bring the Dunbar Station into compliance, it is required that:

The entire bottom portion of the vertical engine driven cooler is enclosed to reduce the compressor building interior noise that is escaping out of the elevated cooler (i.e., beneath the package skid and furthest cooler foundation support). There are a number of methods to accomplish this, and one possibility is to utilize standard metal studs with 1-2 layers of ½ inch concrete board to span from the bottom of the vertical cooler structure to the ground. It is recommended that any gaps are filled with insulation and sealed with caulk.

Existing Units 1-3 – Engine Exhaust Silencers

As recommended in the original Analysis, Maxim silencers were utilized for Units 1-3, however the silencers are not performing as anticipated. It is our current opinion that the exhaust silencer design has been modified by the manufacturer, and this newer design has less attenuation than the older design. In addition, the exhaust piping between the compressor building has not been acoustically insulated.

Therefore, to bring the Dunbar Station into compliance, it is required that:

A secondary in-line exhaust silencer (vertical style) is placed downstream of the ground mounted Maxim M51 catalyst silencer that provides the following dynamic insertion loss (DIL) value throughout the engine speed range and operating conditions:

DIL Values in dB per O.B. Center Frequency for Secondary In-Line Silencer

31.5	63	125	250	500	1000	2000	4000	8000
12	20	14	10	--	--	--	--	--

The exhaust piping located between the building and outdoor muffler should be completely covered with an acoustical lagging consisting of a metal jacketing along with a 3-inch thick inner layer of high density absorptive insulation that is rated for

[3] Laser Midstream Company, LLC, Millennium Compressor Station, Ambient Sound Survey and Noise Impact Evaluation for NYPSC Section VII Application, Hoover and Keith, Inc., RN 2472, June 3, 2010.

the exhaust system operating temperature. Calcium silicate insulation is not acceptable.

The exhaust pipe expansion joint/flanges should be covered with a removable/reusable acoustical blanket material. The blanket material typically consists of a core of 2-inch thick needled fiber mat (6.0-8.0 pcf density) and a liner material of mass-loaded vinyl (1.0-1.25 psf surface weight) that is covered with a coated fiberglass cloth. The inner layer of insulation should be covered with a stainless steel mesh instead of coated fiberglass cloth. The insulation blanket should be rated for the exhaust system operating temperature.

Prospective Units 5-6 – Auxiliary Equipment

Prospective compressor units 5-6 will be Cat 3616 units which are identical to existing Unit 4. As documented in the Article VII Sound Survey, the Dunbar Compressor Station is in compliance with both the Windsor Township property line criteria and the NYPSC criteria during operation of Unit 4. The following noise measures are recommended for proposed Units 5-6, noting that these noise recommendations are similar to those employed for Unit 4, but with additional requirements which result in more stringent noise control recommendations:

ENGINE EXHAUST SYSTEM – PROPOSED UNITS 5-6

Silenced Sound Pressure Levels

The Vendor shall guarantee that the following octave band sound pressure levels at 50 feet and 90 degrees from the centerline of the exhaust silencer outlet are not exceeded in all directions:

Guaranteed Octave Band SPL (1) at 50 feet and 90° from Silencer Outlet Stack in dB

	Octave Band Center Frequency, Hz.								
	31.5	63	125	250	500	1000	2000	4000	8000
Required	74	69	67	55	50	50	50	45	38
(1) RE: 20 µPa									

Shell Radiated Noise Guarantee

The Vendor shall guarantee that the amount of acoustical energy re-radiated by the silencer shell (i.e., body) shall be equal to or less than the silenced exhaust acoustical energy, to ensure that shell radiated noise does not compromise the far field silencer performance.

Minimum Requirements

The exhaust silencer shall:

- ***Be designed with (4) traditional reactive chambers, noting that flow across a catalyst bulkhead or catalyst section does not meet the definition of a traditional volume-choke-volume section (i.e., reactive chamber).***
- ***Have a minimum shell thickness of ¼" and baffle and head thicknesses of 3/8".***
- ***Include internal cylindrical shell damping to control shell radiated noise.***
- ***Be designed to receive external acoustical insulation and lagging by others in the field. The acoustical lagging system may consist of a 3" thick layer of 10 pcf density mineral wool or ceramic fiber that is covered by an aluminum or heavy-gauge steel jacket.***

The exhaust piping located between the building and exhaust silencer shall be acoustically insulated by others in the field. The acoustical lagging system may consist of a 3" thick layer of 10 pcf density mineral wool or ceramic fiber that is covered by an aluminum or heavy-gauge steel jacket.

All expansion joints shall include a flow liner to reduce internal turbulence across the expansion joint.

Any exterior expansion joints should be covered with a with a removable/reusable acoustical blanket material. The blanket material typically consists of a core of 2-inch thick needled fiber mat (6.0-8.0 pcf density) and a liner material of mass-loaded vinyl (1.0-1.25 psf surface weight) that is covered with a coated fiberglass cloth. The inner layer of insulation should be covered with a stainless steel mesh instead of coated fiberglass cloth.

ENGINE JW/AW COOLER and GAS COOLER – PROPOSED UNITS 5-6

The total A-wt. sound level for each cooler shall not exceed 55 dBA at a distance of 50 feet from the unit perimeter at the rated operating conditions (i.e., all fans and motors in operation). The manufacturer shall provide calculations, with all fans in operation, of the estimated octave band sound pressure levels and guaranteed overall A-Wt. sound level at 50 feet from the cooler perimeter.

Nonetheless, the fan tip speeds should not exceed 8,000 fpm, the drive system shall be V-Belt, and low noise Moore Class 10000 Mag fans shall be utilized.

ATTACHMENT 7

Moore Fans LLC Rating

Phone: (660) 376-3575 http://www.moorefans.com **Fax:(660) 376-2909**

Version 2.21

1/7/2013 10:21

WILLIAMS			Ref No.:			Item No:	**9 FT. MAG**
Class:	**10000**		Hub Type:	**HD**		Blade Type:	**MAG**
Blade Tip:	**AM**		Adjustment:	**MAN**		Rotation:	**RH**
Series:	**24**		Diameter:	**9**	feet	Blades:	**4**
Temperature:	**70**	Deg. F	Elevation:	**0**	feet	Density Ratio:	**1.000**
Volume:	**90000**	ACFM	Air Vel.:	**1452.48**	fpm	Speed:	**255** RPM
Static Pressure:	**0.75**	in H2O	Pv:	**0.131**	in H2O	Pt:	**0.921** in H2O
Power Reqd.:	**19.72**	bhp	Motor:	**20**	bhp	Total Eff:	**66.2%**
						Static Eff:	**53.9%**
Blades Required:	**3.61**		API Blades Req.:	**4**		Blade Load:	**0.904**
Tip Speed:	**7210.0**	fpm				Pitch Number:	**2.85**
Entry Correction:	**1.3**		Tip Clearance:	**0.27**	inches	Design Angle:	**22.7** deg
Exit Correction:	**1.00**		Draft:	**Forced**		Orientation:	**Horizontal**
Torque Factor:	**2**		Motor Torque:	**824**	ft. lbs	Torq/Bld:	**206** ft. lbs
Appr fan weight:	**310**	lbs	**141**	kg		Bore Size:	inches
WR2	**2360**	lb-ft2	**99.6**	kg m2		Bushing Type:	**W**
Thrust Load:	**304**	lbs	**138**	kg		Qty required:	**1**

Noise Levels Per Fan (Forced Draft) (Horizontal Orientation) See Note 2

Sound Power Level

dBA	HZ	63	125	250	500	1000	2000	4000	8000
83.8		**81.3**	**84.8**	**82.6**	**79.9**	**78.2**	**76.2**	**73.3**	**71.3**

Sound Pressure Level 1 meter below fan

71.4	**68.9**	**72.4**	**70.2**	**67.5**	**65.8**	**63.8**	**60.9**	**58.9**

Sound Pressure Level 1 meter radially from blade tip

66.0	**63.5**	**67.0**	**64.8**	**62.1**	**60.4**	**58.4**	**55.5**	**53.5**

Class 10000, Series 24, 9 feet Diameter, 4 Blades

Manual Adjustment, Heavy Duty, MAG, Right Hand Rotation

With AM Blade Tips,

Fan Model No. 1024/094-W0-A/24R-AM-9-9.00-4

Fan Drawing: http://moorefans.com/pdfs/TMC_855_A.pdf

Note 1: Maximum blade angle to prevent fan stall is 27.7 degrees.
Available motor power may limit maximum angle to a lower value.

Note 2: Noise levels are the best estimate of the fan noise with 0 dBA additional noise included due to drive components, flow obstructions or structure reflection and reverberation.

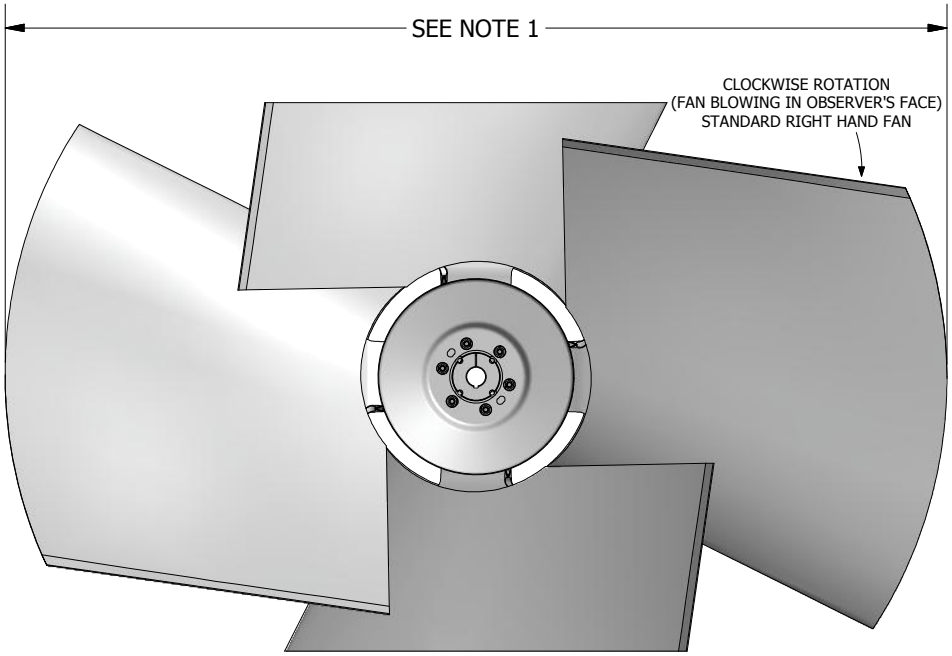

NOTE:1
MAXIMUM FAN DIAMETER (BLADES HORIZONTAL - AS SHIPPED) EQUALS NOMINAL FAN DIAMETER.
ADJUSTMENT OF -.5 AND +.75 INCHES POSSIBLE AT INSTALLATION

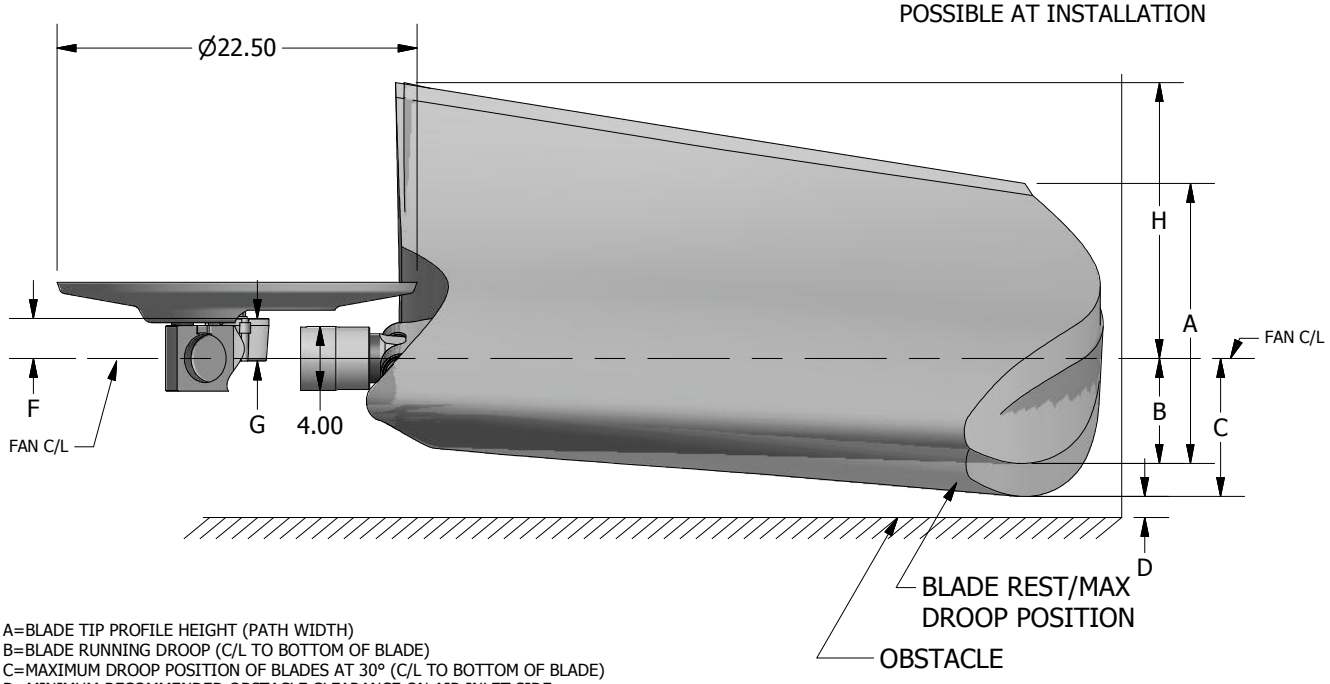

A=BLADE TIP PROFILE HEIGHT (PATH WIDTH)
B=BLADE RUNNING DROOP (C/L TO BOTTOM OF BLADE)
C=MAXIMUM DROOP POSITION OF BLADES AT 30° (C/L TO BOTTOM OF BLADE)
D=MINIMUM RECOMMENDED OBSTACLE CLEARANCE ON AIR INLET SIDE
H=MAXIMUM HEIGHT OF BLADE AT 30° (C/L TO AIR OUTLET SIDE)

F=FAN CENTERLINE TO BASE OF BUSHING (STANDARD HUB WITHOUT EXTENSION)
G=OVERALL BUSHING HEIGHT
L=MAX BUSHING TORQUE FT. LBS
#=WITH S.A.E. STANDARD KEYWAY IN BUSHING
*=WITH SHALLOW KEYWAY IN BUSHING
°=MAX METRIC BORE WITH STANDARD KEYWAY

	BLADE ANGLE			PERCENT BLADE LOADING				
	10°	20°	30°	100%	75%			
DIA	A			B		C	D	H
9.0'	14.2"	21.9"	29.7"	13.0"	12.0"	14.0"	6"	23.1"

BUSHING TYPE	NUMBER OF BLADES	MAX # BORE	MAX * BORE	MAX ° BORE	F	G	L
U	3	2.75"	2.938"	75	2.525"	2.7"	4000
W	4	3.75"	4.000"	100	2.725"	2.8"	7300

SERIES 24 - 9 FT DIAMETER FAN
RIGHT HAND ROTATION

MAG SERIES 24

TMC 855 REV A (03/11)

Moore Fans LLC Rating

Phone: (660) 376-3575 http://www.moorefans.com **Fax:(660) 376-2909**

Version 2.21

2/7/2013 11:47

SEC			Ref No.:	**132-2Z**		Item No:	
Class:	**10000**		Hub Type:	**HD**		Blade Type:	**MAG**
Blade Tip:	**AM**		Adjustment:	**MAN**		Rotation:	**RH**
Series:	**36**		Diameter:	**11**	feet	Blades:	**4**
Temperature:	**100**	Deg. F	Elevation:	**1500**	feet	Density Ratio:	**0.895**
Volume:	**153722**	ACFM	Air Vel.:	**1703.76**	fpm	Speed:	**200** RPM
Static Pressure:	**0.529**	in H2O	Pv:	**0.162**	in H2O	Pt:	**0.723** in H2O
Power Reqd.:	**26.09**	bhp	Motor:	**30**	bhp	Total Eff:	**67.1%**
						Static Eff:	**49.1%**
Blades Required:	**3.45**		API Blades Req.:	**4**		Blade Load:	**0.863**
Tip Speed:	**6911.5**	fpm				Pitch Number:	**2.84**
Entry Correction:	**1.2**		Tip Clearance:	**0.5**	inches	Design Angle:	**25.6** deg
Exit Correction:	**1.00**		Draft:	**Forced**		Orientation:	**Horizontal**
Torque Factor:	**2**		Motor Torque:	**1576**	ft. lbs	Torq/Bld:	**394** ft. lbs
Appr fan weight:	**338**	lbs	**154**	kg		Bore Size:	inches
WR2	**4028**	lb-ft2	**170.1**	kg m2		Bushing Type:	**W**
Thrust Load:	**357**	lbs	**162**	kg		Qty required:	**1**

Noise Levels Per Fan (Forced Draft) (Horizontal Orientation) See Note 2

Sound Power Level

dBA	HZ	63	125	250	500	1000	2000	4000	8000
84.9		**82.4**	**85.9**	**83.7**	**81.0**	**79.3**	**77.3**	**74.4**	**72.4**

Sound Pressure Level 1 meter below fan

71.4	**68.9**	**72.4**	**70.2**	**67.5**	**65.8**	**63.8**	**60.9**	**58.9**

Sound Pressure Level 1 meter radially from blade tip

66.3	**63.8**	**67.3**	**65.1**	**62.4**	**60.7**	**58.7**	**55.8**	**53.8**

Class 10000, Series 36, 11 feet Diameter, 4 Blades

Manual Adjustment, Heavy Duty, MAG, Right Hand Rotation

With AM Blade Tips,

Fan Model No. 1036/094-W0-A/36R-AM-9-11.00-4

Fan Drawing: http://moorefans.com/pdfs/TMC_856_B.pdf

Note 1: Maximum blade angle to prevent fan stall is 30.0 degrees.
Available motor power may limit maximum angle to a lower value.

Note 2: Noise levels are the best estimate of the fan noise with 0 dBA additional noise included due to drive components, flow obstructions or structure reflection and reverberation.

Moore Fans LLC Rating

Phone: (660) 376-3575 http://www.moorefans.com **Fax:(660) 376-2909**

Version 2.22

1/2/2013 15:33

Williams			Ref No.:			Item No:	
Class:	**10000**		Hub Type:	**HD**		Blade Type:	**MAG-9**
Blade Tip:	**AM**		Adjustment:	**MAN**		Rotation:	**RH**
Series:	**36**		Diameter:	**11**	feet	Blades:	**5**
Temperature:	**70**	Deg. F	Elevation:	**0**	feet	Density Ratio:	**1.000**
Volume:	**116290**	ACFM	Air Vel.:	**1288.89**	fpm	Speed:	**165** RPM
Static Pressure:	**0.485**	in H2O	Pv:	**0.103**	in H2O	Pt:	**0.619** in H2O
Power Reqd.:	**17.68**	bhp	Motor:	**20**	bhp	Total Eff:	**64.2%**
						Static Eff:	**50.3%**
Blades Required:	**4.54**		API Blades Req.:	**5**		Blade Load:	**0.907**
Tip Speed:	**5702.0**	fpm				Pitch Number:	**2.60**
Entry Correction:	**1.3**		Tip Clearance:	**0.66**	inches	Design Angle:	**23.8** deg
Exit Correction:	**1.00**		Draft:	**Forced**		Orientation:	**Horizontal**
Torque Factor:	**2**		Motor Torque:	**1273**	ft. lbs	Torq/Bld:	**255** ft. lbs
Appr fan weight:	**425**	lbs	**193**	kg		Bore Size:	inches
WR2	**5035**	lb-ft2	**212.6**	kg m2		Bushing Type:	**W**
Thrust Load:	**306**	lbs	**139**	kg		Qty required:	**1**

Noise Levels Per Fan (Forced Draft) (Horizontal Orientation) See Note 2

Sound Power Level

dBA	HZ	63	125	250	500	1000	2000	4000	8000
83.0		**89.0**	**88.0**	**85.0**	**80.0**	**78.0**	**72.0**	**66.0**	**60.0**

Sound Pressure Level 1 meter below fan

69.5	**75.5**	**74.5**	**71.5**	**66.5**	**64.5**	**58.5**	**52.5**	**46.5**

Sound Pressure Level 1 meter radially from blade tip

64.3	**70.3**	**69.3**	**66.3**	**61.3**	**59.3**	**53.3**	**47.3**	**41.3**

Estimated Sound Pressure Level Multiple Fans (2 fans at 50 ft from periphery)

53.0	**59.0**	**58.0**	**55.0**	**50.0**	**48.0**	**42.0**	**36.0**	**30.0**

Class 10000, Series 36, 11 feet Diameter, 5 Blades

Manual Adjustment, Heavy Duty, MAG, Right Hand Rotation

With AM Blade Tips,

Fan Drawing: http://moorefans.com/pdfs/TMC_856_B.pdf

Note 1: Maximum blade angle to prevent fan stall is 28.5 degrees.
Available motor power may limit maximum angle to a lower value.

Note 2: Noise levels are the best estimate of the fan noise with 0 dBA additional noise included due to drive components, flow obstructions or structure reflection and reverberation.

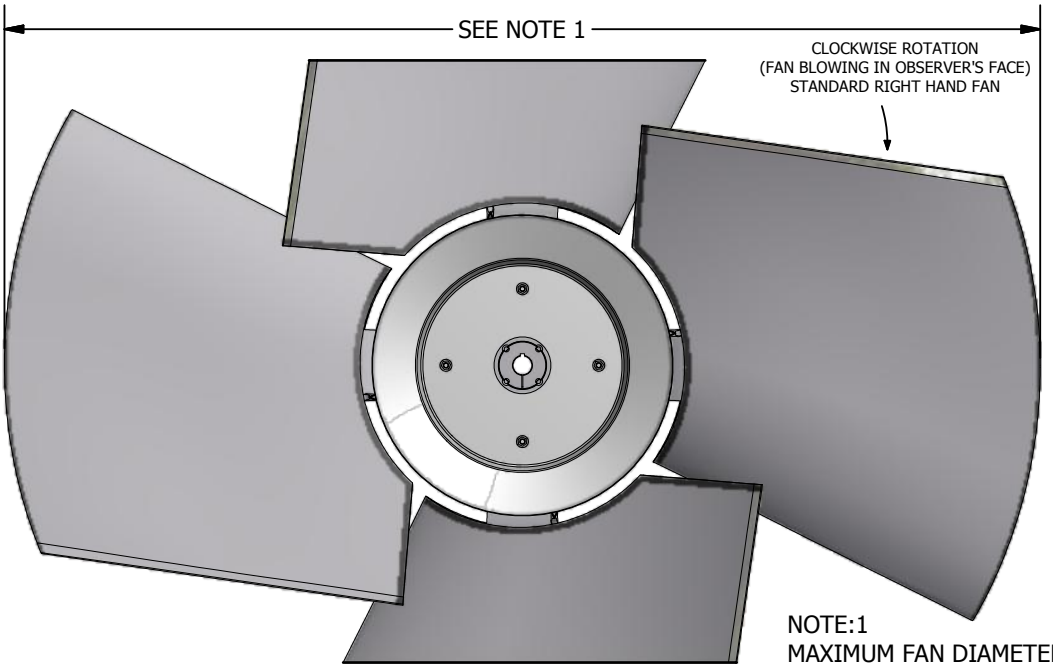

NOTE:1
MAXIMUM FAN DIAMETER (BLADES HORIZONTAL - AS SHIPPED) EQUALS NOMINAL FAN DIAMETER.
ADJUSTMENT OF ±1.5 INCHES POSSIBLE AT INSTALLATION

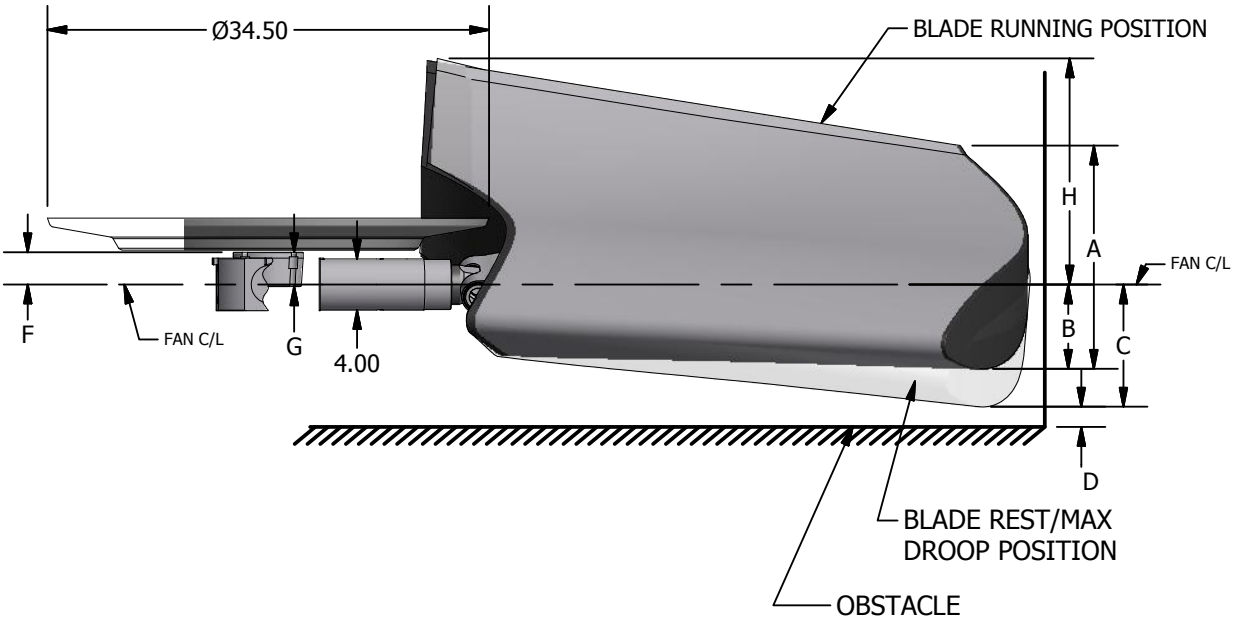

A=BLADE TIP PROFILE HEIGHT (PATH WIDTH)
B=BLADE RUNNING DROOP (C/L TO BOTTOM OF BLADE)
C=MAXIMUM DROOP POSITION OF BLADES AT 30° (C/L TO BOTTOM OF BLADE)
D=MINIMUM RECOMMENDED OBSTACLE CLEARANCE ON AIR INLET SIDE
H=MAXIMUM HEIGHT OF BLADE AT 30° (C/L TO AIR OUTLET SIDE)

F=FAN CENTERLINE TO BASE OF BUSHING (STANDARD HUB WITHOUT EXTENSION)
G=OVERALL BUSHING HEIGHT
L=MAX BUSHING TORQUE FT. LBS
#=WITH S.A.E. STANDARD KEYWAY IN BUSHING
*=WITH SHALLOW KEYWAY IN BUSHING
°=MAX METRIC BORE WITH STANDARD KEYWAY

	BLADE ANGLE			PERCENT BLADE LOADING				
	10°	20°	30°	100%	75%			
DIA	A			B		C	D	H
10.0'	14.2"	21.9"	29.7"	13.0"	12.0"	14.0"	6"	23.1"
11.0'	14.2"	21.9"	29.7"	14.0"	13.0"	16.0"	6"	23.1"

BUSHING TYPE	NUMBER OF BLADES	MAX # BORE	MAX * BORE	MAX ° BORE	F	G	L
U	3	2.75"	2.938"	75	2.525"	2.7"	4000
W	4	3.75"	4.000"	100	2.725"	2.8"	7300

SERIES 36
RIGHT HAND ROTATION

MAG SERIES 36

TMC 856 REV B (12/28)

Moore Fans LLC Rating

Phone: (660) 376-3575 http://www.moorefans.com **Fax:(660) 376-2909**

Version 2.21

6/26/2012 11:50

EadsAXC			Ref No.:	**111826-A3R2**		Item No:	**132-2Z**
Class:	**10000**		Hub Type:	**HD**		Blade Type:	**MAG**
Blade Tip:	**AM**		Adjustment:	**MAN**		Rotation:	**RH**
Series:	**36**		Diameter:	**11**	feet	Blades:	**3**
Temperature:	**100**	Deg. F	Elevation:	**1000**	feet	Density Ratio:	**0.912**
Volume:	**125763**	ACFM	Air Vel.:	**1393.88**	fpm	Speed:	**240** RPM
Static Pressure:	**0.438**	in H2O	Pv:	**0.110**	in H2O	Pt:	**0.570** in H2O
Power Reqd.:	**17.71**	bhp	Motor:	**20**	bhp	Total Eff:	**63.8%**
Power @ -20 deg.	**22.54**	bhp				Static Eff:	**49.0%**
Blades Required:	**1.86**		API Blades Req.:	**3**		Blade Load:	**0.618**
Tip Speed:	**8293.8**	fpm				Pitch Number:	**1.94**
Entry Correction:	**1.2**		Tip Clearance:	**0.75**	inches	Design Angle:	**13.3** deg
Exit Correction:	**1.00**		Draft:	**Forced**		Orientation:	**Horizontal**
Torque Factor:	**2**		Motor Torque:	**875**	ft. lbs	Torq/Bld:	**292** ft. lbs
Appr fan weight:	**270**	lbs	**123**	kg		Bore Size:	inches
WR2	**3222**	lb-ft2	**136.0**	kg m2		Bushing Type:	**U**
Thrust Load:	**282**	lbs	**128**	kg		Qty required:	**2**

Noise Levels Per Fan (Forced Draft) (Horizontal Orientation) See Note 2

Sound Power Level

dBA	HZ	63	125	250	500	1000	2000	4000	8000
84.8		**82.3**	**85.8**	**83.6**	**80.9**	**79.2**	**77.2**	**74.3**	**72.3**

Sound Pressure Level 1 meter below fan

71.3	**68.8**	**72.3**	**70.1**	**67.4**	**65.7**	**63.7**	**60.8**	**58.8**

Sound Pressure Level 1 meter radially from blade tip

66.1	**63.6**	**67.1**	**64.9**	**62.2**	**60.5**	**58.5**	**55.6**	**53.6**

Estimated Sound Pressure Level Multiple Fans (1 fans at 50 ft from periphery)

52.1	**49.6**	**53.1**	**50.9**	**48.2**	**46.5**	**44.5**	**41.6**	**39.6**

Class 10000, Series 36, 11 feet Diameter, 3 Blades

Manual Adjustment, Heavy Duty, MAG, Right Hand Rotation

With AM Blade Tips,

Fan Model No. 1036/094-U0-A/36R-AM-9-11.00-3

Fan Drawing: http://moorefans.com/pdfs/TMC_856_B.pdf

Note 1: Maximum blade angle to prevent fan stall is 24.2 degrees.
Available motor power may limit maximum angle to a lower value.

Note 2: Noise levels are the best estimate of the fan noise with 0 dBA additional noise included due to drive components, flow obstructions or structure reflection and reverberation.

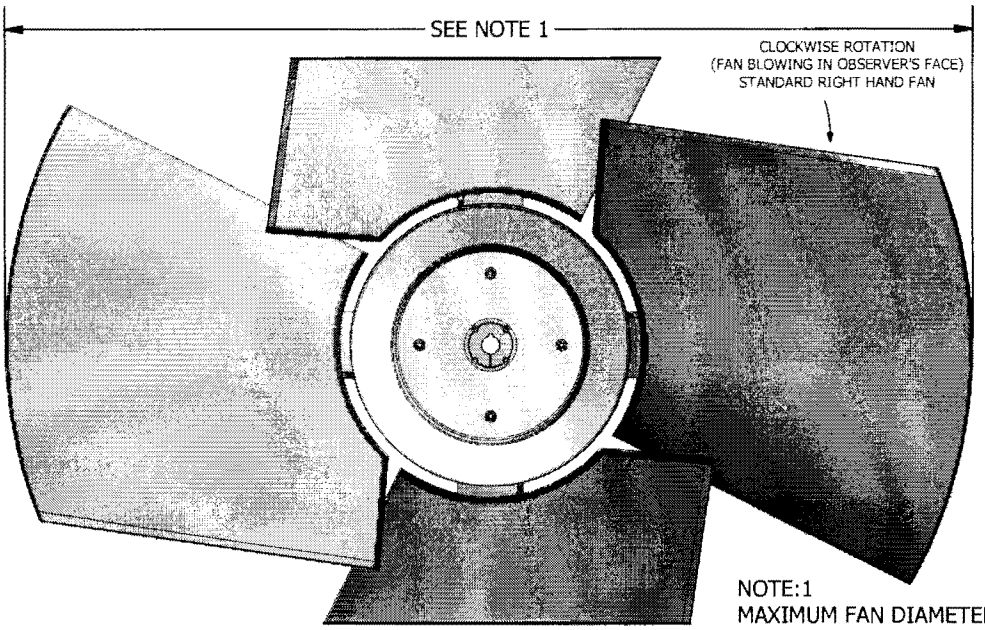

NOTE:1
MAXIMUM FAN DIAMETER (BLADES HORIZONTAL - AS SHIPPED) EQUALS NOMINAL FAN DIAMETER.
ADJUSTMENT OF ±1.5 INCHES POSSIBLE AT INSTALLATION

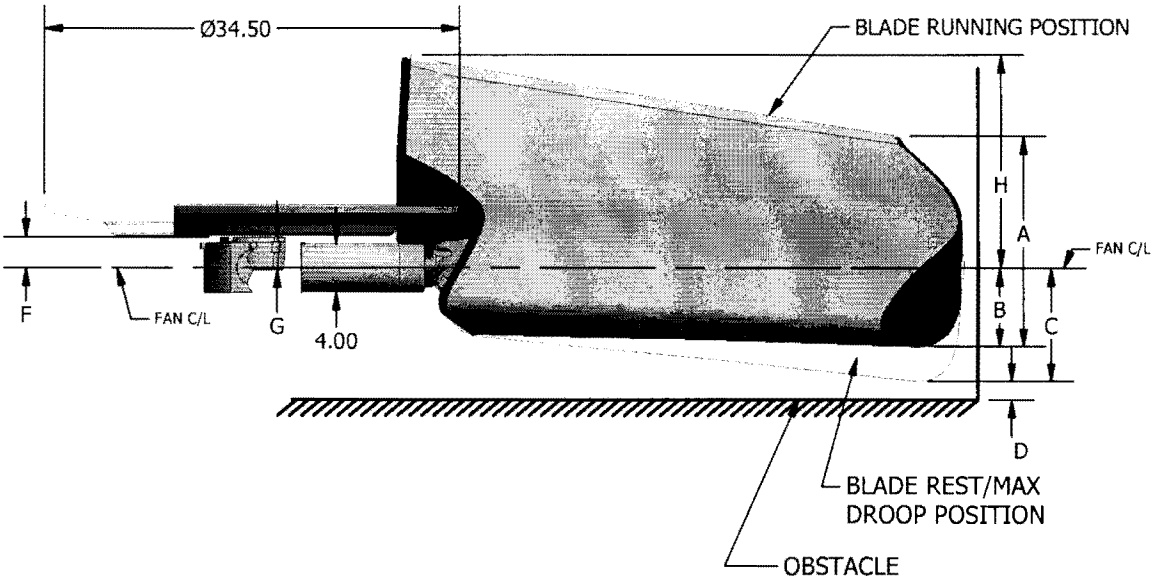

A=BLADE TIP PROFILE HEIGHT (PATH WIDTH)
B=BLADE RUNNING DROOP (C/L TO BOTTOM OF BLADE)
C=MAXIMUM DROOP POSITION OF BLADES AT 30° (C/L TO BOTTOM OF BLADE)
D=MINIMUM RECOMMENDED OBSTACLE CLEARANCE ON AIR INLET SIDE
H=MAXIMUM HEIGHT OF BLADE AT 30° (C/L TO AIR OUTLET SIDE)

F=FAN CENTERLINE TO BASE OF BUSHING (STANDARD HUB WITHOUT EXTENSION)
G=OVERALL BUSHING HEIGHT
L=MAX BUSHING TORQUE FT. LBS
#=WITH S.A.E. STANDARD KEYWAY IN BUSHING
*=WITH SHALLOW KEYWAY IN BUSHING
°=MAX METRIC BORE WITH STANDARD KEYWAY

	BLADE ANGLE			PERCENT BLADE LOADING				
	10°	20°	30°	100%	75%			
DIA	A			B		C	D	H
10.0'	14.2"	21.9"	29.7"	13.0"	12.0"	14.0"	6"	23.1"
11.0'	14.2"	21.9"	29.7"	14.0"	13.0"	16.0"	6"	23.1"

BUSHING TYPE	NUMBER OF BLADES	MAX # BORE	MAX * BORE	MAX ° BORE	F	G	L
U	3	2.75"	2.938"	75	2.525"	2.7"	4000
W	4	3.75"	4.000"	100	2.725"	2.8"	7300

Moore FANS.

SERIES 36
RIGHT HAND ROTATION

MAG SERIES 36

TMC 856 REV B (12/28)

Moore Fans LLC Rating

Phone: (660) 376-3575 http://www.moorefans.com **Fax:(660) 376-2909**

Version 2.21

7/26/2012 9:51

120406			Ref No.:			Item No:	**144-3Z**
Class:	**10000**		Hub Type:	**HD**		Blade Type:	**MAG**
Blade Tip:	**AM**		Adjustment:	**MAN**		Rotation:	**RH**
Series:	**48**		Diameter:	**12**	feet	Blades:	**3**
Temperature:	**100**	Deg. F	Elevation:	**1000**	feet	Density Ratio:	**0.912**
Volume:	**161461**	ACFM	Air Vel.:	**1561.06**	fpm	Speed:	**240** RPM
Static Pressure:	**0.4306**	in H2O	Pv:	**0.138**	in H2O	Pt:	**0.597** in H2O
Power Reqd.:	**22.61**	bhp	Motor:	**30**	bhp	Total Eff:	**67.1%**
Power @ -20 deg.	**28.77**	bhp				Static Eff:	**48.5%**
Blades Required:	**1.63**		API Blades Req.:	**2**		Blade Load:	**0.544**
Tip Speed:	**9047.8**	fpm				Pitch Number:	**1.63**
Entry Correction:	**1.2**		Tip Clearance:	**0.58**	inches	Design Angle:	**12.5** deg
Exit Correction:	**1.00**		Draft:	**Forced**		Orientation:	**Horizontal**
Torque Factor:	**2**		Motor Torque:	**1313**	ft. lbs	Torq/Bld:	**438** ft. lbs
Appr fan weight:	**282**	lbs	**128**	kg		Bore Size:	inches
WR2	**4051**	lb-ft2	**171.1**	kg m2		Bushing Type:	**U**
Thrust Load:	**351**	lbs	**159**	kg		Qty required:	**1**

Noise Levels Per Fan (Forced Draft) (Horizontal Orientation) See Note 2

Sound Power Level

dBA	HZ	63	125	250	500	1000	2000	4000	8000
85.9		**83.4**	**86.9**	**84.7**	**82.0**	**80.3**	**78.3**	**75.4**	**73.4**

Sound Pressure Level 1 meter below fan

71.8	**69.3**	**72.8**	**70.6**	**67.9**	**66.2**	**64.2**	**61.3**	**59.3**

Sound Pressure Level 1 meter radially from blade tip

66.8	**64.3**	**67.8**	**65.6**	**62.9**	**61.2**	**59.2**	**56.3**	**54.3**

Estimated Sound Pressure Level Multiple Fans (1 fans at 50 ft from periphery)

52.7	**50.2**	**53.7**	**51.5**	**48.8**	**47.1**	**45.1**	**42.2**	**40.2**

Class 10000, Series 48, 12 feet Diameter, 3 Blades

Manual Adjustment, Heavy Duty, MAG, Right Hand Rotation

With AM Blade Tips,

Fan Model No. 1048/094-U0-A/48R-AM-9-12.00-3

Fan Drawing: http://moorefans.com/pdfs/TMC_857_B.pdf

Note 1: Maximum blade angle to prevent fan stall is 24.4 degrees.
Available motor power may limit maximum angle to a lower value.

Note 2: Noise levels are the best estimate of the fan noise with 0 dBA additional noise included due to drive components, flow obstructions or structure reflection and reverberation.

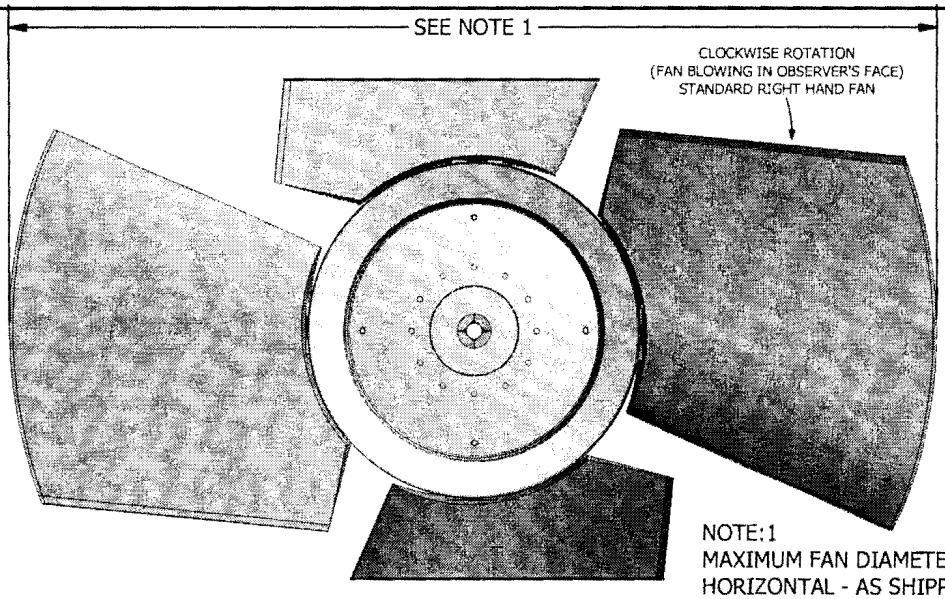

NOTE:1
MAXIMUM FAN DIAMETER (BLADES HORIZONTAL - AS SHIPPED) EQUALS NOMINAL FAN DIAMETER.
ADJUSTMENT OF ±1.5 INCHES POSSIBLE AT INSTALLATION

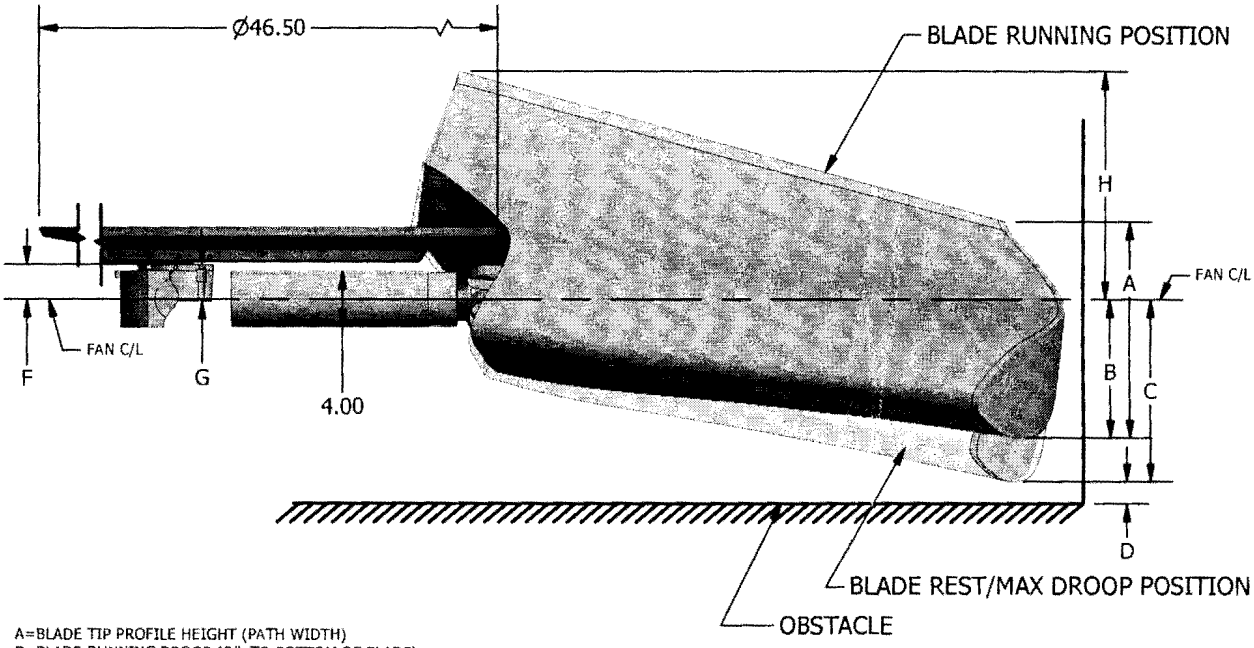

A=BLADE TIP PROFILE HEIGHT (PATH WIDTH)
B=BLADE RUNNING DROOP (C/L TO BOTTOM OF BLADE)
C=MAXIMUM DROOP POSITION OF BLADES AT 30° (C/L TO BOTTOM OF BLADE)
D=MINIMUM RECOMMENDED OBSTACLE CLEARANCE ON AIR INLET SIDE
H=MAXIMUM HEIGHT OF BLADE AT 30° (C/L TO AIR OUTLET SIDE)

F=FAN CENTERLINE TO BASE OF BUSHING (STANDARD HUB WITHOUT EXTENSION)
G=OVERALL BUSHING HEIGHT
L=MAX BUSHING TORQUE FT. LBS
#=WITH S.A.E. STANDARD KEYWAY IN BUSHING
*=WITH SHALLOW KEYWAY IN BUSHING
°=MAX METRIC BORE WITH STANDARD KEYWAY

	BLADE ANGLE			PERCENT BLADE LOADING				
	10°	20°	30°	100%	75%			
DIA	A			B		C	D	H
11.0'	14.2"	21.9"	29.7"	13.0"	12.0"	14.0"	6"	23.1"
12.0'	14.2"	21.9"	29.7"	14.0"	13.0"	16.0"	6"	23.1"

BUSHING TYPE	NUMBER OF BLADES	MAX # BORE	MAX * BORE	MAX ° BORE	F	G	L
U	3	2.75"	2.938"	75	2.525"	2.7"	4000
W	4	3.75"	4.000"	100	2.725"	2.8"	7300

Moore FANS.

SERIES 48
RIGHT HAND ROTATION

MAG SERIES 48

TMC 857 REV B (12/28)

ATTACHMENT 8

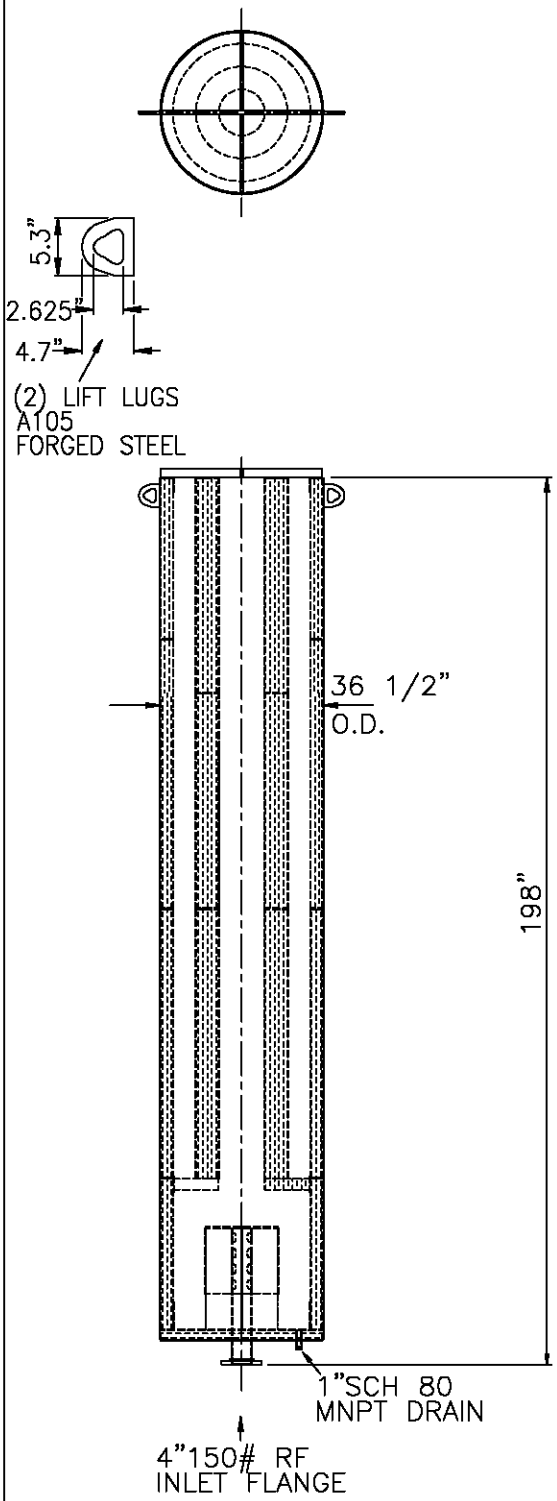

OPERATING CONDITIONS:
TYPE GAS: NATURAL GAS (MW = 17.38)
FLOW RATE: 121,205 LB/HR MAX
VENTED FROM 1100 PSIG, 120°F
FLOW RATE CONTROL: BY ORIFICE PLATE
UPSTREAM OF SILENCER
(BY OTHERS)

SILENCER BACK PRESSURE ON 4" INLET FLANGE:
MAXIMUM 109 PSIG AT 121,205 LB/HR

SILENCED VENT NOISE: 68 dBA AT 100 FEET MAXIMUM

SILENCER PANEL FLOW AREA: 3.4 SQUARE FEET

MATERIALS OF CONSTRUCTION:
SHELL: 1/4" SA-36 CARBON STEEL
HEAD: (2) 1/4" SA-36 CARBON STEEL FLAT
INTERNALS: 12 GA (0.105") CARBON STEEL PERFO
PACKING: 6 #/CU.FT. FIBERGLASS MAT, PROTECTED BY
PERFO, 304 SS FINE MESH SCREEN WIRE
AND FIBERGLASS CLOTH

EXTERIOR PAINT: HIGH TEMPERATURE BLACK

WEIGHT: 2900 LBS.

CERTIFICATION
CUSTOMER: LASER MIDSTREAM
CUSTOMER P.O.: 03100511128
DATE: 11/4/2011 BY: Tom Waxham

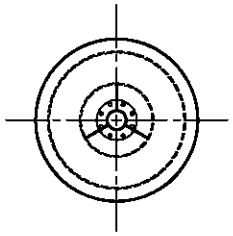

MAXIM SILENCERS

10635 BRIGHTON LANE
STAFFORD, TX. 77477
PHONE (832) 554-0980
FAX (832) 554-0990

36" VT-3 NATURAL GAS VENT SILENCER
(WITH 4"150# INLET)

NO.	REVISIONS	BY	DATE
A	CORRECTED TYPO IN HEAD DESCRIPTION	TJW	11/4/11

DRAWN	TJW	10/10/11	ORDER NO.	DRAWING NO.	REV
CHECKED			414237-03	142-8A13745	A
APPROVED	TJW	10/10/11			

BURGESS-MANNING
a division of Peerless Mfg Co

Blowdown Silencer/Separator Specification Data Sheet

Customer:	Williams	Proposal No: 28644	Rev: 2

General	
Item A:	Dunbar Expansion
Model:	TH-88
Quantity:	1

Operating Data		
Fluid:	Natural Gas	
Inlet:	Suction/Discharge/Fuel	
Volume	4688 / 8239 / 148	ACF
Initial Pressure	700 / 1300 / 160	PSIG
Blowdown Time	270 / 270 / 30	SEC
Exit Velocity:	15,246	FT/MIN

Mechanical Design		
Design Standard:	ASME Sec VIII Div 1	
Code Stamp:	NO	
Shell Design Pressure:	0	PSIG
Design Temperature:	120	F
Corrosion Allowance:	0.125	INCHES
NDE:	None	

Materials of Construction	
Flanges:	Carbon Steel
Shell:	Carbon Steel
Internal Diffusers:	Carbon Steel
Internal Perf Plate:	Carbon Steel
Acoustic Pack:	Single Strand Fiberglass
External Finish:	Clean to SSPC-SP6
	Epoxy Primer
	Polyurethane Finish

Outline Drawing

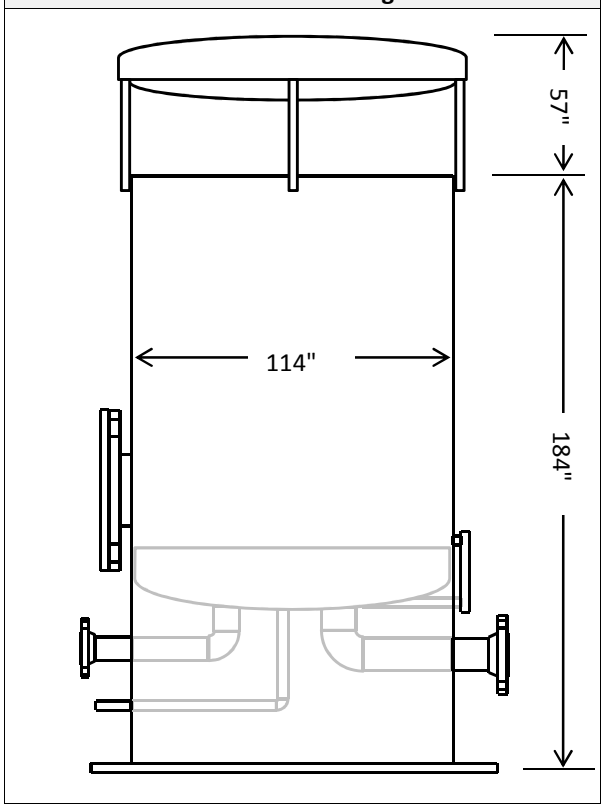

Weight & Dimensions		
Estimated Weight:	22,000	lbs
Shell Thickness:	0.375	in

Connections		
Inlet (suction):	6"	600LB RFWN
Inlet (dis):	8"	600LB RFWN
Inlet (fg):	6"	150LB RFWN
Outlet:	114"	Open w/ Weatherhood
Drain:	1"	FNPT
Inspection:	20"	Plate Flange w/ Blind

Design Notes

Includes spinner blades to remove 97% of liquid particles 8 microns and larger. Includes a 530 gallon sump and a liquid level gauge

Acoustic Performance	Measured at **200 ft** and **90 degrees** from the silencer outlet									
Octave Band Center Frequency (Hz)	31.5	63	125	250	500	1K	2K	4K	8K	Overall
Calculated Unsilenced Noise (dBA)	62	80	95	105	112	106	99	90	79	113.8
Dynamic Insertion Loss (dB)	43	48	53	57	58	49	41	31	21	
Calculated Silenced Noise (dBA)	19	32	42	48	54	57	58	59	58	64.6

ATTACHMENT 9

COMPLAINT LOG

FACILITY NAME/ADDRESS: Dunbar Compressor Station
106 Patterson Road, Windsor NY

DATE OF COMPLAINT:

TIME OF COMPLAINT:

WEATHER CONDITIONS:

NAME OF PERSON(S)
FILING COMPLAINT:

ADDRESS/EMAIL:

TELEPHONE NUMBER:

EMPLOYEE ACCEPTING COMPLAINT:

DESCRIPTION OF COMPLAINT

FOLLOW UP/ABATEMENT

SIGNATURE/CERTIFICATION

Print Name	Signature	Date Resolved